COCHIN PORT AUTHORITY

CHIEF ENGINEER'S OFFICE,
COCHIN - 682 009.
Tele: 91-0484 -2666414/0484-258-2400
Telefax: 91-0484-2666414
E-mail: ce@cochinport.gov.in;
Website: www.cochinport.gov.in

TENDER FOR

RECONSTRUCTION OF MARAR ROAD AND G. V. IYYER ROAD WITH CC PAVER BLOCKS, RCC DRAINS, BOX CULVERTS, UTILITY DUCTS ETC., AT W/ISLAND

BID DOCUMENT

COCHIN PORT AUTHORITY
CIVIL ENGINEERING DEPARTMENT

Tender No:T10/T-2117/2026-C

Tender for

RECONSTRUCTION OF MARAR ROAD AND G. V. IYYER ROAD WITH CC PAVER BLOCKS, RCC DRAINS, BOX CULVERTS, UTILITY DUCTS ETC., AT W/ISLAND

INDEX

Section I	1.	Notice Inviting Tenders	4-10
	2.	Instructions to Tenderers	11-36
	3.	Form of Bid	37-39
	4.	Form of Agreement	40-43
	5.	Contract Data	44-48
	6.	Annexures 1 to 15	49-77
Section II	1.	General Conditions of Contract: Part A – G	81-136
	2.	Form of Securities (Annexure A, B & C)	137-145
Section III	1.	General Description of work	148-162
	2.	Special Conditions of Contract	163-176
Section IV	1.	Technical Specifications	178-204
	2.	Drawings	210-212
Section V	1.	Preamble	206-209
	2.	Bill of Quantities	Attached Separately

SECTION -I

SECTION I

COCHIN PORT AUTHORITY

Phone : 10484- 2582400,2666414
Fax : 0484-2666414
Email : ce@cochinport.gov.in
Website: www.cochinport.gov.in

Chief Engineer's Office,
Cochin – 682 009.

No.T10/T-2117/2026-C

Dated: 19.10.2026

1. Notice Inviting Tender (NIT)

1. Electronic Tenders (**e-tenders**) on percentage basis are invited by Cochin Port Authority from reputed contractors in Single Stage Two Cover bidding procedure [Technical Bid and Financial Bid], meeting the Minimum Eligibility Criteria specified below for the work of **"Reconstruction of Marar Road and G. V. Iyyer Road with CC Paver Blocks, RCC Drains, Box Culverts, Utility Ducts etc., at W/Island"**

2. **Minimum Eligibility Criteria (MEC)**

a) Experience

The tenderers should have experience of having successfully completed or substantially completed the works mentioned below during the last 7 (seven) years ending 31st September 2026, at least either:

i) Three similar works each costing not less than **Rs.3,37,93,200/-**

(OR)

ii) Two similar works each costing not less than **Rs.4,22,41,400/-**

(OR)

iii) One similar work costing not less than **Rs.6,75,86,300/-**

Note:

i) In case of substantial completion, the certificate shall be produced as substantially completed.

ii) Ongoing works with minimum 90% financial progress also will be considered for Experience of MEC supported by satisfactory progress and performance certification by the Employer.

b) Financial Turnover

Average Financial Turnover of the tenderer over the last three financial years ending 31st March 2025 of the previous financial year [2022-'23, 2023-'24& 2024-'25] shall not be less than **Rs.2,53,44,900.00/-**

Explanatory notes to a) & b):

Note 1:- Similar work(s) means **"Road works using WMM/ CC Paver Blocks with drain, culvert etc.**"

Note 2:- Following enhancement factors will be used for the costs of works executed for bringing the financial figures to a common base value in respect of the works completed in past years.

Table- 1

Year before	Multiplying factor
One year [September 2025]	1.07
Two years [September 2024]	1.14
Three years [September 2023]	1.21
Four years [September 2022]	1.28
Five years [September 2021]	1.35
Six years [September 2020]	1.42

Note 3:-The experience certificate of works executed in private sectors /organisations shall be considered for qualification, only on submission of TDS certificate along with work order and completion certificate, and also the details furnished in ***Annexure-4(a)*** & ***Annexure-4(b)***, certified by Chartered Accountant with UDIN.

Note 4:-Satisfactory Client /Owners' Certificate or documentary proof shall be submitted in support of the assignments / works performed and claimed by the tenderer to fulfil the eligibility criteria for qualification.

Note5:-A statement duly certified by the Chartered Accountant with UDIN No. showing the average annual Financial Turnover over the last 3 financial years and audited financial statements for the last three years shall be submitted.

Note6:-The works reckoned for the above purpose are those executed by the tenderers as prime contractor or proportionately as member of joint venture or as a sub-contractor, authorized and approved by the

Employer of the work(s) against which the tenderer has claimed his experience; it will be considered for qualification only if documentary proof of such authorization / approval of the Employer are submitted.

3. **Other Eligibility Considerations**

3.1 Even though the bidders meet the above qualifying criteria, they are subject to be disqualified if they have:

i) made misleading or false representations in the forms, statements and attachments submitted in proof of the qualification requirements; and/or

ii) record of poor performance such as abandoning the works, not properly completing the contract, inordinate delays in completion, continuous litigation history, or financial failures etc.

iii) not submitted complete documents as per clause 22 of "Instructions to Bidders".

3.2 The bidders having EPF/ ESI registration certificates shall only be considered for qualification in the tenders, if applicable, as per EPF/ESI Acts. In case, the tenderer does not have the required number of employees which makes such registration mandatory, an Undertaking as per ***Annexure-10*** to the effect shall be furnished.

4. **Pertinent information to the tender is given in the following Tables:**

i) Schedule of different activities till submission of the bid are detailed as under:

Table – 2

Sl. No.	Particulars	Date and Time
1	Tender e- publication date	**19/10/2026**
2	Download period of Bid Documents	**19/10/2026 to 09/11/2026**
3	Date of pre-bid meeting	**27/10/2026 at 11:00 hrs**
4	Last date for seeking clarification	**26/10/2026 at 15:30 hrs**
5	Last date and time of submission of bid	**10/11/2026 up to 14:30 hrs**
6	Date and time of opening the bid	**10/11/2026 after 15:00 hrs**

ii) Bid information:

Table – 3

i)	Estimated Amount put to Tender	**Rs.8,44,82,800.00/-**
ii)	Earnest Money Deposit	**Rs.16,89,700.00** furnished either through Demand Draft/ Pay Order/ Banker's Cheque or through an irrevocable Bank Guarantee (BG)from any Nationalized Bank/ Scheduled Bank in India/ Insurance Security Bond drawn in favour of the FA & CAO, CoPA from the Insurance Company duly approved by the Insurance Regulatory and Development Authority of India valid for a period of 180 days from the date of opening of tender, enforceable and encashable at Cochin Payment can also be made online mode (NEFT/RTGS) as per Bank details at ***Annexure-15*** of Bid document.
iii)	Cost of Bid document	**Rs.2,360.00/-** (Rs.2,000+ 18% GST) (Non-refundable) furnished either through Demand Draft/ Pay Order/ Banker's Cheque in favour of the FA & CAO, Cochin Port Authority (CoPA), payable at Kochi, from any Nationalised Bank/ Scheduled Bank in India. Payment can also be made online mode (NEFT/RTGS) as per Bank details at ***Annexure-15*** of Bid document.
iv)	Validity period of Tender	180 days from the Last Date of Submission of Bid.
v)	Time for Completion	**9 (Nine) months**

5. **This work essentially comprises of the following:**

(i) Part-A: Re-surfacing Marar Road consists of:

(1) Construction of new drains with electrical cable duct & data

cable duct and box culverts at road crossings.

(2) Re-surfacing road with paver blocks.

(ii) Part-B: Re-surfacing G. V. Iyyer Road consists of:

(1) Construction of new drains with electrical cable duct & data cable duct and box culverts at road crossings.

(2) Re-surfacing road with paver blocks.

6. Bid Documents can be downloaded from the e-Tendering portal ***www.tenderwizard.com/COPT***on the dates specified in the above Table-2 given above by making online requisition. Bid Document will also be available in Cochin Port website (***www.cochinport.gov.in***) as well as Central Public Procurement (CPP) Portal which can be downloaded for submission. The cost of Bid Document shall be furnished in the form of Demand Draft/ Pay Order/ Banker's Cheque drawn in favour of FA & CAO, CoPA along with the submission of Bid. Payment can also be made online mode (NEFT/RTGS) as per Bank details at ***Annexure-15***

7. The bidders need to obtain the one time User ID & password for log-in to in **e-Tendering** system from the service provider **KEONICS** by paying registration amount of **Rs.1124/-** by online Payment using Credit/ Debit Card/ Net banking or DD in favour of "KSEDCL, Bangalore".

8. The intending bidder must have valid Class-II or III digital signature certificate to submit the bid. For further details and to obtain the digital signature, please contact e-Tender Help Desk No. 080-49352000 / 9605557738.

9. Tenders shall be submitted "**online"** strictly in accordance with the Instructions to Tenderers and Terms & Conditions given in the tender document.

10. The bidder is responsible to download Addenda/ Amendments/ Errata/ Replies to the queries of the bidders etc., if any, issued by the Employer, from the website before submission of the bid. Any shortfall in submissions of the said Addenda/ Amendments/Errata/Replies to the queries of the bidders duly signed etc. along with the downloaded documents while submitting the bid will not be considered. Incomplete bid documents may be rejected.

11. All bids are to be submitted **online only** on the website www.tenderwizard.com/COPT. No Bids shall be accepted off-line (Hard copy).

12. Cochin Port Authority will not be held responsible for any technical snag or network failure during online bidding. It is the bidder's responsibility to comply with the system requirements i.e. hardware, software and internet connectivity at bidder's premises, to access the e-Tender portal. Under any circumstances, Cochin Port Authority shall not be liable to the bidders for any direct/indirect

loss or damages incurred by them arising out of incorrect use of the e-Tender system or internet connectivity failures.

13. The bidder shall submit Originals of the following in a sealed cover **to The Chief Engineer, Cochin Port Authority, W/Island, Cochin – 682009, KERALA**, before opening date and time of the tender.

    (i) DD / Bankers Cheque etc. towards the cost of tender document,
    (ii) Demand Draft / Pay Order / Banker‘s Cheque / Insurance Security Bond / BG etc. towards EMD,
    (iii) Power of Attorney in favour of signatory(s) to the tender and
    (iv) Integrity Pact along with letter of submission.

    Tenders without submitting the original documents towards cost of Tender document, EMD, Power of Attorney and Integrity Pact, as above, before opening date and time of the tender will be liable for rejection.

14. Micro and Small Enterprises (MSE’s) Bidders who are registered with District Industries Centre (DIC) or Khadi and Village Industries Commission (KVIC) or Khadi and Village Industries Board (KVIB) or Coir Board or National Small Industries Corporation (NSIC) or directorate of Handicrafts and Handlooms or Udyog Aadhaar Memorandum or any other body specified by Ministry of MSME for similar nature of Works **shall not** be eligible for issue of Bid Document free of cost and exemption from payment for issue of tender document & payment of EMD.

15. **Integrity Pact (IP**) **Integrity Pact (IP**) shall cover this tender throughout its various phases, and IP would be deemed as a part of the contract through an appropriate provision. The bidders should sign and submit an Integrity Pact to be executed between the bidder and Cochin Port Authority along with the bid in a separate envelope superscribed “Integrity Pact in Technical Bid”. Bids not accompanied by a duly signed Integrity Pact shall be liable for rejection. IP would be implemented through the following Independent External Monitor (IEM) for this tender:

    1. Shri. Harishwar Dayal, IDSE (Retd),
       H-2, Lawyer Colony, Bypass Road,
       Agra-282 005 (UP) Mobile No.9412095786.
       e-mail id: dayalagra@gmail.com

    2. Shri. Deepak Chaturvedi, ITS (Retd),
       Flat No.1, Sanchar Vihar, C-5814, Sector-62,
       Uttar Pradesh, Noida -201301 Mobile No.9930408711.
       e-mail id: chaturvedideep@rediffmail.com

    For full details of the scheme of IP, you may visit the website of Central Vigilance Commission, New Delhi.

16. The undersigned reserves the right to reject/cancel/postpone any one or all tenders at any stage of the tender, which shall be binding on all bidders.

CHIEF ENGINEER
COCHIN PORT AUTHORITY

SECTION I

COCHIN PORT AUTHORITY

2. INSTRUCTIONS TO TENDERERS

Clause/ Sections	DESCRIPTION	Page No.
1	Introduction	13
2	General Instructions	13
3	Invitation for Bids	16
4	Downloading of Tender Documents	17
5	One Bid per Bidder	17
6	The Bidder	17
7	Cost of Bidding	17
8	Site visit	17
9	Clarification of the bidding documents	17
10	Pre-bid meeting	17
11	Amendment of bidding documents	18
12	Preparation of bids	18
13	Minimum Eligibility Criteria	18
14	Bid prices	21
15	Currencies of Bid and Payment	21
16	Bid validity	21
17	Bid security/ EMD	21
18	Forfeiture of Bid Security/EMD	22
19	No alternative proposals by bidders	22
20	Format and signing of bid	22
21	Bid submission	23
22	Information required in the Bid	24
23	Submission of bids through e-tender mode	26
24	List of documents to be submitted	27
25	Deadline for Submission of the Bids	27
26	Late bids	27

27	Bid opening	28
28	Bid opening – Price Bid	28
29	Clarification of Bids	38
30	Examination of bids and Determination of responsiveness	29
31	Correction of errors	29
32	Evaluation and comparison of Bids	30
33	Alteration of Tender documents	30
34	Alternative conditions and proposal	30
35	Award of contract	30
36	Release of Bid security/ EMD	30
37	Performance security	31
38	Signing of Agreement	31
39	Fraud and corrupt Practices.	32
40	Rejection of Tender	33
41	Conflict of Interest	33

SECTION - I

COCHIN PORT AUTHORITY

2. INSTRUCTIONS TO TENDERERS

1. Introduction

1.1 The work mainly includes the following:-

(i) Reconstruction of Marar road:

- Construction of new drains with electrical & data cable ducts and box culverts at road crossings.
- Re-surfacing of the road with CC paver blocks.
- Providing retro reflective mandatory/ regulatory sign boards and cautionary/ warning sign boards.

(ii) Reconstruction of G. V. Iyyer Road:

- Construction of new drains with electrical & data cable ducts and box culverts at road crossings.
- Re-surfacing of the road with CC paver blocks.
- Providing retro reflective mandatory/ regulatory sign boards and cautionary/ warning sign boards.

2. General Instructions

2.1 The work is to be executed as described in the Bid document and in particular in the Technical Specifications, Special Conditions, Schedule of Quantities and Drawings and in general includes, but is not limited to supplying all including consumables and equipment necessary to execute the work as described in the Bid Document.

2.2 Before submitting the bid, the bidder shall examine carefully all conditions of contract, specifications, drawings etc. supplied herewith. The bidders shall inspect the site of work with prior appointment with the concerned Section Engineer of the work to get himself acquainted with the site conditions and to assess and satisfy himself of the difficulties and constraints which may be involved in executing the work in the location. It will be deemed that prior to the submission of tender, the tenderer has visited the site and has satisfied himself as to the nature and location of the work, general and local conditions, particularly those pertaining to transportation, handling and availability and

storage of materials, availability of labour, weather conditions, tidal variations at site, working conditions, ground level, nature of soil etc. and that the tenderer has estimated his cost accordingly and the Port Authority will be in no way responsible for the lack of such knowledge and also consequences thereof to the tenderer. Failure to visit the site will in no way relieve the successful bidder of any of the obligations in performing the work in accordance with this Bid Document including addenda/corrigenda, within the quoted price.

2.3 A bidder shall be deemed to have full knowledge of all documents, site conditions etc. whether he has inspected them or not. The submission of a bid by the bidder implies that he has read the notice and conditions of contract and has made himself aware of the scope and specifications and other factors bearing on the bid and that they are binding on him.

2.4 The bidders may please note that the EMPLOYER will not entertain any correspondence or query on the status of the offers received against this Bid. Bidders are also requested not to depute any of their personnel or agents to visit the Employer's offices for making such enquiries till finalization of the bid. Should the EMPLOYER find it necessary to seek any clarification, technical or otherwise, the concerned bidder will be duly contacted by the EMPLOYER.

2.5 Canvassing in any form by the bidder or by any other agency acting on behalf of the bidder after submission of the bid may disqualify the said bidder. The Employer's decision in this regard shall be final and binding on the bidder.

2.6 EMPLOYER will not be liable for any financial obligation in connection with the work until such time the EMPLOYER has communicated to the successful bidder in writing his decision to entrust the Work (covered by the bid document issued to him).

2.7 E-mail offers will not be considered. Bidders should prepare their bid themselves and submit it "online". Bids submitted by agents will not be recognized.

2.8 Bids received after the due date and time and any change in bid after the specified date & time will be rejected. EMPLOYER will not be responsible for the loss of the bid document or for the delay in postal transit.

2.9 In case of an unscheduled holiday on the prescribed closing/opening day of the bid, the next working day will be treated as the scheduled prescribed day of closing/opening of the bid.

2.10 While evaluating the document, regard would be paid to National Defence and security considerations, at the discretion of the Cochin Port Authority. Bid

received from any bidder may be summarily rejected on National security consideration without any intimation thereof to the bidder.

2.11 If there are varying or conflicting provisions made in any document forming part of the contract, the Chief Engineer, Cochin Port Authority, Cochin – 682009, shall be the deciding authority with regard to the intention of the document which shall be binding on the Bidder.

2.12 In case the department desires to inspect the equipments/ machinery for confirmation of its availability and capacity etc., necessary arrangements shall be made by the contractor for such inspection at his own cost.

2.13 Any error in description, and any omissions there from shall not vitiate the contract or release the contractors from the execution of whole or any part of the works comprised therein according to drawings and specifications or from any of his obligations under the contract

2.14 All the Bank Guarantees (BGs)/ Insurance Security Bonds (ISB) to be furnished by the contractors in connection with the tender shall be sent to the Chief Engineer, Cochin Port Authority, directly by the issuing bank under registered post with AD. The contractor shall take the responsibility of sending BGs directly to the Port Authority by the issuing bank.

2.15 The Contractor/ approved Sub-Contractor, if any, shall comply with all the provisions of The Code on Wages (2019), The Code on Social Security (2020), The Industrial Relations Code (2020) and The Occupational Safety, Health and Working Conditions (OSH) Code (2020) etc. amended from time to time and rules framed there under and other laws affecting the contract labour that may be brought into force from time to time.

2.16 As per EPF/ ESI Acts, the Tenderer shall be registered under EPF and ESI Act and the employees employed under them shall be covered in the EPF and ESI scheme. In such cases, who are registered under EPF Organisation and ESI Corporation and furnish documentary evidence in support of valid registration shall only be considered for qualification for opening of Price Bids. In case, the Tenderer does not have the required number of employees which makes such registration mandatory, an undertaking as per ***Annexure –10*** to the effect shall be furnished.

2.17 The Contractor shall regularly remit the Employer and Employee contribution of EPF/ESI to the authorities and produce documentary evidence for the same, before releasing the interim/ final bill. If not, the Department would remit the same and the amount so remitted shall be deducted from the part/final bill of contractor.

2.18 The contractor shall be registered under GST and shall furnish documentary evidence in support of valid GST registration.

2.19 Micro and Small Enterprises (MSE's) Bidders who are registered with District Industries Centre (DIC) or Khadi and Village Industries Commission (KVIC) or Khadi and Village Industries Board (KVIB) or Coir Board or National Small 12 Industries Corporation (NSIC) or directorate of Handicrafts and Handlooms or Udyog Aadhaar Memorandum or any other body specified by Ministry of MSME for similar nature of Works **shall not** be eligible for issue of Bid Document free of cost and exemption from payment for issue of tender document & payment of EMD.

2.20 If a bidder has already been awarded or qualified for a similar nature work with a higher value or equivalent value within the last 6 months from the date of notice inviting tender, the tender of such bidder shall be evaluated / considered for qualification with the documents submitted by the bidders in those tenders. **Bidder shall clearly state the details of above such works in the Letter of Submission.**

3. Invitation for Bids:

3.1 The Invitation for Bids is open to all eligible bidders meeting the Minimum Eligibility Criteria.

4. Downloading of Tender Documents:

4.1 Tender documents can be downloaded from the e-Tendering portal www.tenderwizard.com/COPT on the dates specified in NIT by making online requisition. Tender document can also be downloaded from Cochin Port website www.cochinport.gov.in as well as Central Public Procurement portal (CPP portal). The cost of Bid shall be furnished in the form of Demand Draft/ Pay order/ Banker's cheque drawn in favour of the Financial Adviser & Chief Accounts Officer (FA &CAO), CoPA from any Scheduled/ Nationalized Bank having its branch at Cochin. The bidders are also permitted to pay the cost of Bid Document by online mode (NEFT/ RTGS). The Bank Account details of Cochin Port Authority is attached as ***Annexure-15***. The bidders shall upload the proof of payment made towards the Cost of Bid Document along with the Bid Document while submitting the Bid electronically in the e-tendering Portal.

4.2 In case of tender document being downloaded from the website, at the time of uploading, the tenderer shall give an undertaking in ***Annexure-8***, that no changes have been made in the document. Port's Tender document will be treated as authentic tender and if any discrepancy is noticed at any stage between the Port's tender document and the one submitted by the tenderer, the Port's document shall prevail. For the discrepancies found at any time, the

tenderer shall be liable for legal action.

5. One Bid per Bidder:

5.1 Each bidder shall submit only one bid. A bidder who submits or participates in more than one Bid will cause all the proposals with the Bidder's participation to be disqualified.

6. The Bidder:

6.1 The Bidder shall be a single entity only and no Joint Venture/ Consortium will be permitted.

7. Cost of Bidding:

7.1 The bidder shall bear all costs associated with the preparation and submission of his Bid, and the Employer will, in no case, be responsible and liable for those costs.

8. Site visit:

8.1 The Bidder, at the Bidder's own responsibility and risk is encouraged to visit and examine the work site and its surroundings and obtain all information that may be necessary for preparing the Bid and entering into a contract for execution of the Works. The cost of visiting the site shall be at the Bidders' own expense.

9. Clarification of the Bidding Documents:

9.1 The Tenderers are advised to examine the Tender Document carefully and if there be or appear to be any ambiguity or discrepancy in the documents, or any clarifications needed on the Tender Documents; these shall be referred to the Chief Engineer in writing at the following address, so as to reach them at least one day before the date fixed for the Pre-Bid Meeting. It is to be noted that no queries, clarifications will be answered after the Pre-Bid Meeting.

THE CHIEF ENGINEER,
CHIEF ENGINEER'S OFFICE,
COCHIN PORT AUTHORITY,
WILLINGDON ISLAND,
KOCHI-9,
KERALA, INDIA.
Ph:- 91-0484-2666414/2582400/ 2582406.
Fax:-91-0484-2666414, Email: ce@cochinport.gov.in

10. Pre-Bid Meeting:

10.1 A Pre-bid meeting will be held through Hybrid Mode to answer clarifications, if any, on the bid document and meeting link will be shared through the portals. This meeting will be held on the date notified in the Notice Inviting Tender. Non-attendance at the Pre-Bid Meeting will not be a cause for disqualification of a bidder. Minutes of the meeting, including the text of the questions raised (without identifying the source of enquiry) and the responses given will be published in the e- tender portal as well as in Cochin Port Authority official website as Addenda/ Corrigenda. Any modification to the bid documents as a result of the Pre-Bid Meeting shall be made exclusively through the issue of Addenda/ Corrigenda.

11. Amendment of Bidding Documents:

11.1 The Chief Engineer, Cochin Port Authority shall have the right to omit or suspend certain items of work or revise or amend the Bid documents prior to the due date of submission of the Bid by issuance of addenda/corrigenda. Any addendum/ corrigendum thus issued shall be part of the tender documents. The addenda/ corrigendum, if any, shall only be hosted in the e-tender portal as well as in the website of the Cochin Port. It is the responsibility of the Bidders to download such addendum/ corrigenda hosted in the website and submit the same duly signed along with the bid. In order to afford the Bidders with reasonable time to take addendum into account, or for any other reason, the Port Authority may, at its discretion, extend the due date for submission of bid and bid extension notice shall be hosted in the web site.

12. Preparation of bids:

12.1 All documents relating to the bid shall be in the English language.

13. Minimum Eligibility Criteria (MEC):

a) Experience

The tenderers should have experience of having successfully completed or substantially completed the works mentioned below during the last 7 (seven) years ending 31st September 2026, at least either:

i) Three similar works each costing not less than **Rs.3,37,93,200.00/-**

(OR)

ii) Two similar works each costing not less than **Rs.4,22,41,400.00/-**

(OR)

iii) One similar work costing not less than **Rs. 6,75,86,300.00/-**

Note:

i) In case of substantial completion, the certificate shall be produced as substantially completed.

ii) Ongoing works with minimum 90% financial progress also will be considered for Experience of MEC supported by satisfactory progress and performance certification by the Employer.

b) Financial Turnover

Average Financial Turnover of the tenderer over the last three financial years ending 31st March 2025 of the previous financial year [2022-'23, 2023-'24 & 2024-'25] shall not be less than **Rs.2,53,44,900.00/-**

Explanatory notes to a) & b):

Note 1:- **"Road works using WMM/ CC Paver Blocks with drain, culvert etc.**"

Note 2:- Following enhancement factors will be used for the costs of works executed for bringing the financial figures to a common base value in respect of the works completed in past years.

Table 1

Year before	Multiplying factor
One year *[September 2025]*	1.07
Two years *[September 2024]*	1.14
Three years *[September 2023]*	1.21
Four years *[September 2022]*	1.28
Five years *[September 2021]*	1.35
Six years *[September 2020]*	1.42

Note 3:- The experience certificate of works executed in private sectors/organisations shall be considered for qualification, only on submission of TDS certificate along with work order and completion certificate and also the details furnished in ***Annexure-4(a)*** & ***Annexure-4(b)***, certified by Chartered Accountant with UDIN No.

Note 4:- Satisfactory Client/ Owners' Certificate or documentary proof shall be submitted in support of the assignments/ works performed and claimed by the tenderer to fulfil the eligibility criteria for qualification.

Note 5:- A statement duly certified by the Chartered Accountant with UDIN No.

showing the average annual Financial Turnover over the last 3 financial years and audited financial statements for the last three years shall be submitted.

Note 6:- The works reckoned for the above purpose are those executed by the tenderers as prime contractor or proportionately as member of joint venture or as a sub-contractor, authorized and approved by the Employer of the work(s) against which the tenderer has claimed his experience; it will be considered for qualification only if documentary proof of such authorization / approval of the Employer are submitted.

13.1 **Other Eligibility Considerations:**

13.2 Even though the bidders meet the above qualifying criteria, they are subject to be disqualified if they have:

i) made misleading or false representations in the forms, statements and attachments submitted in proof of the qualification requirements; and/or

ii) record of poor performance such as abandoning the works, not properly completing the contract, inordinate delays in completion, continuous litigation history, or financial failures etc.

iii) not submitted complete documents as per Clause-22 of "Instructions to Bidders".

13.3 The bidders having EPF/ ESI registration certificates shall be considered for qualification in the tenderers, if applicable, as per EPF/ ESI Acts. In case, the tenderer does not have the required number of employees which makes such registration mandatory, an Undertaking as per ***Annexure-10*** to the effect shall be furnished.

14. Bid Prices:

14.1 **Percentage Basis Contract**

The Bidder shall fill the percentage above / below in the Bidder's Quoting Area under "Percentage Quoted" in the schedule-II (Schedule of Quantities to be done on Contract) both in **figures and words**. The Bidder shall also fill Above/ Below column.

14.2 On scrutiny, if there are differences between the percentage given in figures and in words, the following procedure shall be followed:-

a) When there is a difference between the percentage quoted in figures and in words, the percentage in words shall be taken as correct.

b) When the (+)/(-) and Above/Below does not correspond to with each other, the "words" under "Above/ Below" shall be taken as correct.

14.3 The rate / percentage quoted by the Tenderer shall be inclusive of the cost of provision of plant and equipment, materials, labour, execution, supervision, maintenance, overheads and profits and every incidental and contingent cost and charges whatsoever excluding Goods and Service Tax (GST). GST as may be applicable from time to time shall be shown separately in the invoice.

14.4 The contract shall be for the whole Work based on the Priced Bill of Quantities submitted by the Bidder. **The Bidder should ensure that his tendered percentage as per Price Bid is not mentioned anywhere in any documents in Technical Bid Submission, directly or indirectly. If any such mention is made, the tender will become invalid and shall become liable for rejection.**

15. Currencies of Bid and Payment:

15.1 The unit rates and the prices shown in Schedule II of this document are in Indian National Rupees (INR).

16. Bid Validity:

16.1 Bids shall remain valid for a period not less than one hundred and eighty days (180 days) after the deadline date for bid submission. A bid valid for a shorter period shall be rejected by the Employer as non-responsive. Should any tenderer withdraw his tender before these periods, or make any modification in the terms and conditions of the tender which are not acceptable to the department, the Earnest Money deposited by the tenderer shall be forfeited.

16.2 In exceptional circumstances, prior to expiry of the original time limit, the Employer may request that Bidder may extend the period of validity for an additional period. The request and bidders response shall be made in writing. A bidder agreeing to the request will not be permitted to modify his bid (i.e., the extension shall be unconditional) and shall submit an extension of EMD in case it is submitted in the form of Bank Guarantee.

17. Bid Security / EMD:

17.1 Each tender should be accompanied by an Earnest Money amounting to **Rs.16,89,700.00** (**Rupees Sixteen Lakhs Eighty Nine Thousand Seven Hundred Only**) EMD shall be deposited/furnished either through Demand Draft/ Banker's Cheque/ Pay Order/ Insurance Security Bond (ISB) drawn in favour of Financial Adviser & Chief Accounts Officer, Cochin Port Authority from any Nationalized Bank/ Scheduled Bank in India/Insurance Company duly approved by the Insurance Regulatory and Development Authority of India or through an irrevocable Bank Guarantee (BG) valid for a period of 180 days from the date of opening of tender, enforceable and encashable at Cochin, drawn from any Nationalized Bank/ Scheduled Bank operating in India, as per the proforma at ***Annexure-13 & 14***. In case, BG/ISB is furnished

for EMD, BG/ISB shall be verified independently by the Port with the bank before finalization of technical offers; In the event of lack of confirmation of issue of the BG/ISB by the bank/ Insurance Company, the bid shall stand disqualified. The Earnest Money deposit will not carry any interest. Any bid not accompanied by an acceptable Bid Security shall be treated as Non-responsive and shall be rejected by the Employer. Payment can also be made online mode (NEFT/RTGS) as per Bank details at ***Annexure-15*.**

17.2 In case, Bank Guarantee (BG)/ Insurance Security Bond (ISB) is furnished directly for EMD, Bank Guarantee/ ISB shall be verified independently by the Port with the bank/Insurance Company before finalization of technical bids. In the event of lack of confirmation of issue of the BG/ ISB by the bank/ Insurance Company, the bid shall stand disqualified.

17.3 Micro and Small Enterprises (MSE's) Bidders who are registered with District Industries Centre (DIC) or Khadi and Village Industries Commission (KVIC) or Khadi and Village Industries Board (KVIB) or Coir Board or National Small Industries Corporation (NSIC) or directorate of Handicrafts and Handlooms or Udyog Aadhaar Memorandum or any other body specified by Ministry of MSME for similar nature of Works **shall not** be eligible for issue of Bid Document free of cost and exemption from payment for issue of tender document & payment of EMD.

17.4 Any Bid not accompanied by an acceptable Bid Security shall be treated as Non-responsive and shall be rejected by the Employer.

18. Forfeiture of Bid Security / EMD:

18.1 Bid Security/EMD will be forfeited in the following cases:

(a) If a Bidder withdraws his Bid during the period of bid validity.

(b) The Bidder does not accept the correction of the Bid Price pursuant to any arithmetical errors.

(c) In case of a successful bidder fails:
   (i) to commence the work, within the specified time limit
   (ii) to furnish the required Performance Security and to sign the Contract Agreement within the specified time limit

19. No Alternative Proposals by Bidders:

19.1 Bidders shall submit offers that comply with the requirements of the bidding documents. Alternatives will not be considered.

20. Format and Signing of Bid:

20.1 The Tenderer shall prepare one set of his Tender, duly completed and signed,

along with the set of Drawings and other documents mentioned hereinafter. The Power of Attorney (in original) authorizing the signatory(s) of the Tender shall be enclosed. All pages of the bid where entries or amendments have been made shall be signed by the person or persons signing the bid.

20.2 If the tender is made by an individual, it shall be signed by his full name and his address shall be given. In the event of the tender being submitted by a registered partnership firm, it must be signed individually by each partner thereof. In the event of absence of any partner, it must be signed on his behalf by person holding a proper power-of- attorney authorizing him to do so and to bind the partner in all matters pertaining to the contract including the arbitration clause, such power-of-attorney to be attached with the tender which must disclose that the firm is duly registered under Indian Partnership Act. If the tender is made by a Limited Company, it shall be signed by a duly authorized person who shall produce with the tender satisfactory evidence of the authorization. In the case of a Limited Company the tender should be accompanied by the Memorandum and Articles of Association of the Company.

20.3 The Bid without duly signed and sealed tender document will not be considered for acceptance

21. Bid Submission:

21.1 Bid shall be submitted in two parts, **Part - I: Technical Bid** and **Part - II: Price Bid** through **e- tender mode**.

21.2 The Technical Bid document and the scanned copies of the documents as detailed in clause 22.1 below shall be submitted through e-Tendering mode on**www.tenderwizard.com/COPT.**

21.3 Price bid (Schedule-II) in the provided format shall be submitted **only through e-tendering mode on www.tenderwizard.com/COPT**at the time and date specified in the Table of NIT. **In no case shall filled in Price Bid (Schedule-II) be submitted in hard copy, as it shall result in rejection of the tender**.

21.4 Tenders shall be submitted "**online"** strictly in accordance with the Instructions to Tenderers and Terms & Conditions given in the tender document. The bidders should submit scanned copy of all the required documents such as DD / Banker's Cheque towards the cost of tender and EMD; proof of experience, financial details etc. through the e-tendering portal.

21.5 The Bidder shall submit Original of the following documents in a sealed cover, super scribing thereon the Tender Number, Name of Work, date notified for submission of tender and the name of the tenderer should reach the office of **The Chief Engineer, Cochin Port Authority, W/Island, Cochin - 682009, KERALA,** before the time and the day notified in the Table-2 of NIT**.**

(i) DD/ Bankers Cheque/pay order towards the cost of tender document,

(ii) DD/ Bankers Cheque/pay order/ Insurance Security Bond/ BG towards EMD,

(iii) Power of Attorney and

(iv) Integrity Pact along with Letter of Submission

The above documents in original can be brought either in person, or sent by registered post/courier.

21.6 **Tenders without submitting the original documents towards cost of Tender document, EMD, Power of Attorney and Integrity Pact, as above, before opening date and time of the tender will be liable for rejection**.

21.7 The successful Bidder shall submit original duly filled in signed copy of complete Technical Bid and Commercial Bid already submitted in e-mode within 7 days of receipt of Letter of Acceptance issued for the work.

22. Information Required in the Bid:

22.1 **Part I -Technical Bid** shall contain the following:

(a) Earnest Money Deposit/ Bid Security as described in Clause 17.1 above

(b) Cost of tender document indicated in Table-3 of NIT.

(c) Check list as per ***Schedule - I*** attached along with Technical Bid in the e-Tendering Portal

(d) Letter of Submission (vide ***Annexure-1***)

(e) Power of Attorney (in original) in favour of signatory(s) to the Tender, duly authenticated by Notary Public. (vide ***Annexure-2***)

(f) Organization Details (vide ***Annexure-3***)

(g) Details of experience as per ***Annexure-4(a) & 4(b)*** and Certificates in proof of experience in similar works as detailed under Clause-12 of Instruction to bidders.

Explanatory notes:

(1) Original or Notary certified copy of completion certificates of each work along with it's work order / LoA issued by the owner/ the responsible officers of the owner under whom he has executed such contracts shall be attached. The certificate shall invariably contain the following among other things.

(i) Details of work involved specifying the nature of work

(ii) The completion cost of the work

(iii) Date of commencement; and

(iv) Date of completion of the work.

(2) If the experience in similar works is as a member of joint venture, notary attested copy of joint venture agreement in this respect shall be attached.

(3) If the experience in similar works is as a sub-contractor, notary attested copy(s) of approval issued by the Employer(s) authorizing as a sub-contractor; in proof of the claim of the tenderer as a sub-contractor shall be attached.

(4) The works indicated in ***Annexure-4(a)*** will only be considered for evaluation. **Mere submission of work completion certificate will not be considered as Eligible Assignments.**

(h) A statement duly certified by Chartered Accountant with UDIN No. showing Average Financial turnover of the tenderer over the last three financial years [2024-'25, 2023-'24 & 2022-'23] (vide Annexure-5) supported by Audited Financial statements for the last three years.

(i) Form of Bid duly signed and sealed

(j) Bid document including all addenda/ corrigenda duly signed and sealed

(k) Registration certificate of the company/ Partnership deed as the case may be.

(l) Copies of PAN, GST, EPF and ESI registration

(m) A detailed method statement (Technical Note) for carrying out of the works, along with an implementation schedule showing sequence of operation and the time frame for various segments of temporary and permanent works (vide ***Annexure-6***). The information provided will form part of the work methodology and the same shall be in line with the Specifications and Bill of quantities.

(n) A list of Plant and equipment proposed to be engaged for work (vide ***Annexure-7***).

(o) A declaration to the effect that (vide ***Annexure-8***):-

(i) All details regarding construction plant and machinery, temporary work and personnel(s) for site organization considered necessary and sufficient for the work have been furnished in the ***Annexure-7*** and that such plant, temporary works and personnel for site organization will be available at appropriate time of relevant works for which the equipment have been proposed at site till the completion of the respective work.

(ii) No conditions are incorporated in the financial bid. In case any conditions are specified in the financial bid, the tender will be rejected summarily without making any further reference to the bidder.

(iii) We have not made any payment or illegal gratification to any

persons/ authority connected with the bid process so as to influence the bid process and have not committed any offence under PC Act in connection with the bid.

(iv) We disclose with that we have made/ not made payments or propose to be made to any intermediaries (agents) etc. in connection with the bid.

(v) We do hereby confirm that no changes have been made in the tender document uploaded by us for the above bid. Port Tender document will be treated as authentic tender and if any discrepancy is noticed at any stage between the Port's tender document and the one submitted by the tenderer, the Port's document shall prevail.

(p) Bank information for e- Payment system as per ***Annexure-9.***

(q) Undertaking regarding EPF & ESI Registration as per ***Annexure-10***.

(r) Details of litigation history, blacklisting etc. of the Bidder as per ***Annexure-11***

(s) Pre-contract Integrity Pact, duly signed (vide ***Annexure-12*)**

Scanned copy of all the above documents, duly signed and sealed, shall be uploaded for online submission of Technical Bid.

NOTE: If a bidder has already been awarded or qualified for a similar nature work with a higher value or equivalent value within the last 6 months from the date of notice inviting tender, the tender of such bidder shall be evaluated / considered for qualification with the documents submitted by the bidders in those tenders. Bidder shall clearly state the details of above such works in the Letter of Submission.

22.2 **Part II :**"**Price Bid"** shall contain only the "Schedule of Quantities", which shall be submitted only **in e-tendering mode only.**

23. Submission of Bids through e-tender mode:

23.1 The tenders are required to submit the tender, i.e., Part-I: Technical Bid & Part-II: Financial Bid (Price Bid) in ***'e-tender' mode only.***

23.2 For online submission of Technical Bid, the scanned copes of all the documents detailed in the clause–22.1 above shall be submitted through e-tendering mode on www.tenderwizard.com/COPT. e-tenders attaching all documents shall be submitted 'online' in the e-tender portal strictly in accordance with the terms and conditions of the tender document before the time and the day notified in the Table of NIT.

24. List of Documents to be Submitted:

24.1 **List of documents to be uploaded for online submission of Technical Bid**

(i) Scanned copy of financial instruments towards cost of tender document and EMD / Bid Security.

(ii) Scanned copies of ***Annexures 1 to 15***, duly signed

(iii) Scanned copy of Form of Bid duly signed

(iv) Scanned copy of Registration Certificate of the company/ Partnership deed as the case may be.

(v) Scanned notarized copies of completion certificates and work orders / agreement of similar works to be considered for MEC.

(vi) Scanned copies of Audited Financial statements for the last three years.

(vii) Technical Bid document including all Addendum/ Corrigendum and General Conditions of Contract with Amendments in PDF format.

24.2 **List of documents to be submitted in original:**

(i) DD / Pay Order/ Banker‘s Cheque towards Cost of Bid Document, as applicable.

(ii) DD / Pay Order/ Banker‘s Cheque / Insurance Surety Bond /B G towards EMD/ Bid Security, as applicable.

(iii) Power of Attorney, duly authenticated by Notary Public (vide ***Annexure-2***)

(iv) Pre-contract Integrity Pact, duly signed (vide ***Annexure-12***)

(v) Letter of Submission (vide ***Annexure-1***)

25. Deadline for Submission of the Bids:

25.1 <u>E-tenders attaching all documents shall be submitted ‘online’ in the e tender portal strictly in accordance with the terms and conditions of tender document before the time and the day notified in Table 2 of NIT.</u>

25.2 The originals of (i) DD / Bankers Cheque / Bank Guarantee / Pay Order towards the cost of tender document, (ii) DD / Bankers Cheque / Bank Guarantee / Pay Order / Insurance Security Bond towards EMD, (iii) Power of Attorney and (iv) Integrity Pact along with letter of submission in a sealed cover in original super scribed with the Tender Number, Name of Work, date notified for submission of tender and the Name of the Tenderer, should reach the office of the Chief Engineer, Cochin Port Authority, Cochin-9, on or before the time and the day notified in Table 2 of NIT.

26. Late Bids:

26.1 Any Bid received by the Employer after the Bid due date will be returned unopened to the bidder.

27. Bid Opening:

27.1 The Officer inviting the tender or his duly authorized assistant will open the tenders in the presence of intending tenderers who may be present at the time in person or through their authorized representative. In the case of the tenders invited under Two Cover System, the technical bids of the tenders received will be opened first.

27.2 **Technical Bid**: Technical Bid shall be opened in the office of the **Chief Engineer, Cochin Port Authority** on the time and date specified in the table of NIT. Submission of EMD and Cost of document is verified initially. In case the Earnest Money and cost of bid document is not deposited or is not in order, the Bid will not be opened further and hard copy submitted will be returned.

27.3 If all Bidders have submitted unconditional Bids together with requisite Bid security, then all Bidders will be so informed then and there. If any Bid contains any deviation from the Bids documents and /or if the same does not contain Bid security in the manner prescribed in the Bid documents, then that Bid will be rejected and the Bidder will be informed accordingly. The Price Bid submitted in e- mode will not be opened.

27.4 In the event of a tender being rejected, the Earnest Money paid with such unaccepted tender shall be refunded to the tenderer.

28. Bid Opening – Price Bid:

28.1 Price Bid of those Tenderers found responsive in the evaluation of Technical bid, will be opened later. Short listed bidders will be communicated about the date and time of opening of the price bid through the tender portals. The Bidder's name, the Bid prices, the total amount of each Bid, any discounts, Bid modifications and withdrawals, and such other details as the Employer may consider appropriate, will be announced by the Employer at the time of opening.

29. Clarification of Bids:

29.1 To assist in the examination and comparison of Bids, the Employer may, at his discretion, ask any Bidder for clarification of his Bid, including breakdown of unit rates. The request for clarification and the response shall be in writing, but no change in the price or substance of the Bid shall be sought, offered, or permitted.

29.2 No Bidder shall contact the Employer on any matter relating to his bid from the time of the bid opening to the time the contract is awarded. If the Bidder wishes to bring additional information to the notice of the Employer, he should

do so in writing.

29.3 Any effort by the Bidder to influence the Employer's bid evaluation, bid comparison or contract award decisions, may result in the rejection of his bid.

30. Examination of Bids and Determination of Responsiveness:

30.1 Prior to detailed evaluation of Bids, Cochin Port Authority will determine whether each Bid

(a) meets the Minimum Eligibility Criteria defined in Clause 13.

(b) has been properly signed by an authorized signatory (accredited representative) holding Power of Attorney in his favour. The Power of Attorney shall inter alia include a provision to bind the Bidder to settlement of disputes clause;

(c) is accompanied by the required Bid Security, as applicable and;

(d) is responsive to the requirements of the Bidding documents.

(e) A responsive Bid is one which conforms to all the terms, conditions and specification of the Bidding documents, without material deviation or reservation. A material deviation or reservation is one which affects in any substantial way the scope, quality or performance of the Works;

(i) which limits in any substantial way, the Employer's rights or the Bidder's obligations under the Contract; or

(ii) whose rectification would affect unfairly the competitive position of other Bidders presenting responsive Bids.

(iii) Undertakes in the Technical Bid that he has not incorporated any conditions in the Financial Bid.

30.2 If a Bid is not substantially responsive, it shall be rejected by the Employer, and may not subsequently be made responsive by correction or withdrawal of the non-conforming deviation or reservation.

31. Correction of Errors:

31.1 Bids determined to be responsive will be checked by the Employer for any arithmetic errors. Errors will be corrected by the Employer as follows:

(a) Where there is a discrepancy between the percentage in figures and in words, the percentage in words will govern;

(b) The amount stated in the Bid will be adjusted by the Employer in accordance with the above procedure for the correction of errors and, with the concurrence of the Bidder, shall be considered as binding upon the bidder. If the Bidder does not accept the corrected amount, the Bid shall be rejected and the Bid security shall be forfeited in accordance with

Clause 18.1

32. Evaluation and Comparison of Bids:

32.1 The Employer will evaluate and compare only the Bids determined to be responsive in accordance with Clause 30. In evaluating the Bids, the Employer will determine for each Bid the evaluated Bid Price by adjusting the Bid Price as follows:

(a) making any correction for errors pursuant to Clause 31;

(b) making appropriate adjustments to reflect discounts or other price modifications offered.

33. Alteration of tender documents:

33.1 No alteration shall be made in any of the tender documents or in the Bill of Quantities and the tender shall comply strictly with the terms and conditions of the tender document. The Employer may however ask any tenderer for clarifications of his tender if required. Nevertheless, no tenderer will be permitted to alter his tender price after opening of the tender.

34. Alternative conditions and Proposal:

34.1 The Tenderer shall note that alternative or qualifying tender conditions, or alternative design proposal for whole or part of the work will not be acceptable. Tenders containing any qualifying conditions or even Tenderer's clarifications in any form will be treated as non-responsive and will run the risk of rejection. Price Bid of such Tenderer’s will not be opened.

35. Award of Contract:

35.1 The Employer will award the Contract to the bidder whose bid has been determined to be responsive to the bidding documents and who has offered the lowest evaluated bid price, provided that such bidder has been determined to be:

(a) Eligible in accordance with the provisions of Clause 12 &13, and

(b) Qualified in accordance with the provisions of Clause 12 & 13.

36. Release of Bid Security / EMD:

36.1 The Bid Security/EMD of unsuccessful bidder other than L1 and L2 will be refunded immediately after ranking of the Bids. The bid security of L2 bidder shall be refunded immediately after entering into agreement with L1 bidder and acceptance of the Performance Security. The Bid Security of the successful bidder will be discharged after he has signed the Agreement and

furnished the required Performance Security.

37. Performance Security:

37.1 Within not later than 21 days for domestic bids and 28 days for international bids from the date of the Letter of Acceptance, the successful Bidder shall deliver to the Employer a Performance Security in any one of the following form for an amount equivalent to 5% of the Contract price rounded off to the nearest Rs.1,000/- .;

(i) Banker's Cheque/Demand Draft/Pay Order of a Scheduled Bank.

(ii) An irrevocable Bank Guarantee (BG) enforceable and encashable at Cochin, drawn from any scheduled bank operating in India as per the proforma at ***Annexure-A*** of GCC.

(iii) Insurance Security Bond drawn in favour of the FA & CAO, CoPA from the Insurance Company duly approved by the Insurance Regulatory and Development Authority of India as per the proforma at **Annexure-B** of GCC.

37.2 If the performance security is provided by the successful Bidder in the form of a Bank Guarantee, it shall be issued by a Nationalized /Scheduled Indian bank having its branch at Cochin, acceptable by ***Cochin Port Authority.*** If the performance security is provided by the successful Bidder in the form of a Insurance Surety Bond, it shall be issued from any Insurance Company duly approved by the Insurance Regulatory and Development Authority of India. The BG/ISB shall be issued in favour of ***Cochin Port Authority*** in the Format enclosed in ***Annexure-A*** and ***Annexure –B*** of GCC respectively.

37.3 In the event of the tenderer, after the issue of the communication of acceptance of offer by the Board, failing/refusing to execute the agreement as hereinafter provided, the tenderer shall be deemed to have abandoned the contract and such an act shall amount to and be construed as the contractor's calculated and the wilful breach of the contract, the cost and consequence of which shall be to the sole account of the tenderer and upon such an event the Board shall have full right to claim damages therefore either together with or in addition to the forfeiture of Earnest Money Deposit.

38. Signing of Agreement:

38.1 The successful tenderer will be required to execute an Agreement at his expense within 28 (twenty eight) days from the date of work order, on proper value Kerala State Stamp Paper in the prescribed form***.*** The agreement as finally executed will include the Employer's Bid Documents and the Bidder's

offer as finally accepted by the EMPLOYER together with addendum/corrigendum, bid clarification and all correspondences exchanged between EMPLOYER and the bidder, if any. Till the formal agreement is executed, the Letter of Acceptance together with the offer as finally accepted along with correspondences shall form a binding contract between the two parties. The Contractor shall submit 13 (Thirteen) copies of signed agreement excluding original in bound volume at their own cost.

39. Fraud and Corrupt Practices:

39.1 The bidder and their respective officers, employees, agents and advisers shall observe the highest standard of ethics during the Selection Process. Notwithstanding anything to the contrary contained in this document, the Port shall reject the tender without being liable in any manner whatsoever to the bidder, if it determines that the bidder has, directly or indirectly or through an agent, engaged in corrupt practice, fraudulent practice, coercive practice, undesirable practice or restrictive practice (collectively the "Prohibited Practices") in the Selection Process. In such an event, the Port shall, without prejudice to its any other rights or remedies, forfeit and appropriate the Bid Security or Performance Security, as the case may be, as mutually agreed genuine pre-estimated compensation and damages payable to the Port for, inter alia, time, cost and effort of the Authority, in regard to the Tender, including consideration and evaluation of such Bidder's Proposal. Such Bidder shall not be eligible to participate in any tender or RFP issued by the Authority during a period of 2 (two) years from the date such Bidder is found by the Authority to have directly or through an agent, engaged or indulged in any corrupt practice, fraudulent practice, coercive practice, undesirable practice or restrictive practice, as the case may be.

39.2 For the purposes of this Clause, the following terms shall have the meaning hereinafter respectively assigned to them:

(a) "Corrupt practice" means

(i) the offering, giving, receiving, or soliciting, directly or indirectly, of anything of value to influence the action of any person connected with the Selection Process (for avoidance of doubt, offering of employment to or employing or engaging in any manner whatsoever, directly or indirectly, any official of the Authority who is or has been associated in any manner, directly or indirectly with the Selection Process or the LOA or has dealt with matters concerning the Agreement or arising there from, before or after the execution thereof, at any time prior to the expiry of one year from the date such official resigns or retires from or otherwise ceases to be in the service of the Authority, shall be deemed to constitute influencing the actions of a person connected with the Selection Process;

or

(ii) engaging in any manner whatsoever, whether during the Selection Process or after the issue of the LOA or after the execution of the Agreement, as the case may be, any person in respect of any matter relating to the Project or the LOA or the Agreement, who at any time has been or is a legal, financial or technical consultant/ adviser of the Authority in relation to any matter concerning the Project;

(b) "Fraudulent practice" means a misrepresentation or omission of facts or disclosure of incomplete facts, in order to influence the Selection Process;

(c) "Coercive practice" means impairing or harming or threatening to impair or harm, directly or indirectly, any persons or property to influence any person's participation or action in the Selection Process;

(d) "Undesirable practice" means

(i) establishing contact with any person connected with or employed or engaged by the Authority with the objective of canvassing, lobbying or in any manner influencing or attempting to influence the Selection Process; or

(ii) having a Conflict of Interest; and

(e) "Restrictive practice" means forming a cartel or arriving at any understanding or arrangement among Applicants with the objective of restricting or manipulating a full and fair competition in the Selection Process.

40. Rejection of Tender:

40.1 Any Tender not conforming to the foregoing instructions will not be considered. The Employer does not bind himself to accept the lowest or any tender and has the right to reject any tender without assigning any reason thereof. No representation whatsoever will be entertained on this account.

41. Conflict of Interest:

41.1 The Contractor shall not have a Conflict of Interest and any breach hereof shall constitute a breach of the Agreement.

41.2 Contractor and Affiliates not to be otherwise interested in the Project.

41.3 The Contractor agrees that, during the term of this Agreement and after its termination, the Contractor or any Associate thereof and any entity affiliated with the Contractor, shall be disqualified from providing goods, works, services, loans or equity for any project resulting from or closely related to the Services and any breach of this obligation shall amount to a Conflict of Interest; provided that the restriction herein shall not apply after a period of five years from the completion of this Assignment or to consulting assignments

granted by banks/ lenders at any time; provided further that this restriction shall not apply to consultancy/ advisory services provided to the Authority in continuation of this Consultancy or to any subsequent consultancy/ advisory services provided to the Authority in accordance with the rules of the Authority. For the avoidance of doubt, an entity affiliated with the Contractor shall include a partner in the Contractor‘s firm or a person who holds more than 5% (five percent) of the subscribed and paid up share capital of the Contractor, as the case may be, and any Associate thereof.

41.4 Prohibition of conflicting activities

Neither the Contractor nor any Associate thereof/any entity affiliated with the Contractor nor their Personnel shall engage, either directly or indirectly, in any of the following activities:

(i) during the term of this Agreement, any business or professional activities which would conflict with the activities assigned to them under this Agreement;

(ii) after the termination of this Agreement, such other activities as may be specified in the Agreement; or

(iii) at any time, such other activities as have been specified in the Bid as Conflict of Interest.

41.5 Guidance Note on Conflict of Interest is given below.

(1) This Note further explains and illustrates the provisions of the Bid Document, if any, and shall be read together therewith, in dealing with specific cases.

(2) Contractors should be deemed to be in a Conflict of Interest situation if it can be reasonably concluded that their position in a business or their personal interest could improperly influence their judgment in the exercise of their duties. The process for selection of Contractors should avoid both actual and perceived Conflict of Interest.

(3) Conflict of Interest may arise between the Authority and a Contractor or between Contractors and present or future Concessionaries/ Contractors. Some of the situations that would involve Conflict of Interest are identified below:

(a) Authority and Contractors

(i) Potential Contractor should not be privy to information from the Authority which is not available to others; or

(ii) Potential Contractor should not have defined the Project when earlier working for the Authority; or

(iii) Potential Contractor should not have recently worked for the Authority overseeing the Project.

(b) Contractors and Concessionaires/Contractors:

(i) No Contractor should have an ownership interest or a continuing business interest or an on-going relationship with a potential Concessionaire/contractor save and except relationships restricted to project-specific and short-term assignments; or

(ii) No Contractor should be involved in owning or operating entities resulting from the Project;

The participation of companies that may be involved as investors or consumers and officials of the Authority who have current or recent connections to the companies involved, therefore, needs to be avoided.

(4) The normal way to identify Conflicts of Interest is through self-declaration by Contractors. Where a conflict exists, which has not been declared, competing companies are likely to bring this to the notice of the Authority. All conflicts must be declared as and when the Contractors become aware of them.

(5) Another approach towards avoiding a Conflict of Interest is through the use of “Chinese walls” to avoid the flow of commercially sensitive information from one part of the Contractor‘s company to another. This could help overcome the problem of availability of limited numbers of experts for the project. However, in reality effective operation of “Chinese walls” may be a difficult proposition. As a general rule, larger companies will be more capable of adopting Chinese walls approach than smaller companies. Although, “Chinese walls” have been relatively common for many years, they are an increasingly discredited means of avoiding Conflicts of Interest and should be considered with caution. As a rule, “Chinese walls” should be considered as unacceptable and may be accepted only in exceptional cases upon full disclosure by a Contractor coupled with provision of safeguards to the satisfaction of the Authority.

(6) Another way to avoid Conflicts of Interest is through the appropriate grouping of tasks. For example, conflicts may arise if Contractors drawing up the terms of reference or the proposed Documentation are also eligible for the consequent assignment or project.

(7) Another form of Conflict of Interest called “scope–creep” arises when Contractors advocate either an unnecessary broadening of the terms of reference or make recommendations which are not in the best interests of the Authority but wh1ich will generate further work for the Contractors. Some forms of contractual arrangements are more likely to lead to scope-creep. For example, lump-sum contracts provide fewer incentives for this, while time and material contracts provide built in incentives for Contractors to extend the length of their assignment.

41.6 Every Project contains potential Conflicts of Interest. Contractors should not only avoid any Conflict of Interest, they should report any present/ potential Conflict of Interest to the Authority at the earliest. Officials of the Authority involved in development of a project shall be responsible for identifying and resolving any Conflicts of Interest. It should be ensured that safeguards are in place to preserve fair and open competition and measures should be taken to eliminate any Conflict of Interest arising at any stage in the process.

SIGNATURE OF BIDDER

COCHIN PORT AU THORITY

SECTION I

3. FORM OF BID

To

The Board of Major Port Authority for Cochin Port.

Through

The Chief Engineer
Cochin Port Authority, Cochin -9.

Tender for the work of "**Reconstruction of Marar Road and G. V. Iyyer Road with CC Paver Blocks, RCC Drains, Box Culverts, Utility Ducts etc., at W/Island**"

I/We have read and examined the Notice inviting tenders, Instructions to tenderers, Form of Agreement, Contract Data, General Conditions of Contract, General description of work, Special conditions of Contract, Technical Specifications, Drawings, Preamble, Bill of Quantities, & other documents and rules referred to in the General Conditions of Contract and all other contents in the tender document for the work.

I/We hereby tender for the execution of the work specified in the underwritten memorandum within the time specified in such memorandum at the rates specified in the schedule attached hereto and in accordance in all respects with the specifications designs, drawings and instructions in writing referred to in clause 16 of the General Conditions of Contract and with such materials as are provided for, by and in all other respects in accordance with such conditions so far as applicable.

M E M O R A N D U M

a)	General description of work	:	**Reconstruction of Marar Road and G. V. Iyyer Road with CC Paver Blocks, RCC Drains, Box Culverts, Utility Ducts, etc., at W/Island**
b)	Estimated cost	:	**Rs.8,44,82,800/-**
c)	Earnest Money	:	**Rs.16,89,700/-**
d)	Security Deposit	:	10% of the value of the contract awarded or the value of the work

			done whichever is higher [Performance Guarantee @ 5% and Retention Money @ 5%]
e)	Percentage, if any, to be deducted from the bills	:	The Retention Money will be recovered from the first running bill onwards at the rate of 5% of the gross amount of each bill.
f)	Time allowed for commencement of work from the date of issue of work order through email	:	**15 days**
g)	Time allowed for the work from the date of commencement of work.	:	**9 (Nine) months**
h)	Schedule, specifications, conditions, drawings etc. as per contents sheet attached.	:	As per content sheet attached

I/ We agree to keep the tender open for 180 days from the due date of submission and not to make any modifications in its terms and conditions

Should this tender be accepted, I/We hereby agree to abide by and fulfil all the terms and provisions of the said conditions of contract annexed here to so far as applicable or in default thereof forfeit and pay to the Board the sum of money mentioned in the said conditions and to execute an agreement with the Board in the prescribed form or in default thereof to forfeit the earnest money deposited by me/us.

The sum of Rs..... is hereby forwarded in Port challan receipt / Bankers cheque or demand Draft of a scheduled bank / Bank Guarantee issued by a Scheduled bank drawn in favour of Financial Adviser and Chief Accounts Officer of the Port Authority as Earnest Money (a) the full value of which is to be absolutely forfeited to the Board in office without prejudice to any other rights or remedies of the said Board in office should I/We fail to commence the work specified in the Contract data or should I/We not deposit the full amount of Performance Security specified in the above Memorandum in accordance with clause 52.2 of the said conditions of contract otherwise they said sum of Rs. ..... shall be retained by the Board as on account of such security deposit as aforesaid or (b) the full value of which shall be retained by the Board on account of the security deposit to execute all the works referred to in the tender documents upon the terms and conditions contained or referred to therein and to carry out such deviations as may be ordered, up to maximum of the percentage mentioned in Clause 40.1 of General Conditions of Contract and those in excess of that limit at the rates to be determined in accordance with the provision contained in Clause 40.3 of the General Conditions of Contract.

Dated the .....……..... day of …… 2026.

Signature of the Tenderer

Address :

Witness :

Address :

Occupation :

ACCEPTANCE

The above tender (as modified by you as provided in the letters mentioned hereunder) is accepted by me for and on behalf of the Board of Major Port Authority for Cochin Port for a sum of Rs…… …… (Rupees ……)

The letters referred to below shall form part of this contract Agreement

a) ..
b) ..
c)

Dated……

Chief Engineer
Cochin Port Authority

COCHIN PORT AUTHORITY
SECTION I

4. FORM OF AGREEMENT

AGREEMENT No. … of 2026-27

AGREEMENT FOR THE WORK OF "**RECONSTRUCTION OF MARAR ROAD AND G. V. IYYER ROAD WITH CC PAVER BLOCKS, RCC DRAINS, BOX CULVERTS, UTILITY DUCTS, ETC., AT W/ISLAND**"

THIS AGREEMENT IS MADE on this day ..... of …… , 2026 BETWEEN THE BOARD OF MAJOR PORT AUTHORITIES FOR COCHIN PORT AUTHORITY, a body corporate under the Major Port Authority Act, 2021 having office on Willingdon Island, Cochin – 682009 represented by its Chief Engineer ....., S/o. ....., aged ..... years residing at ..... (hereinafter referred to as the Employer which expression shall include his successors, assignees and administrators in the office) of the one part and M/s..... ... represented by Sri. ....., aged ..... years, S/o Sri. ....., residing at ..... (hereinafter referred as "Contractors" which expression shall include his successors, assignees and administrators) of the other part.

WHEREAS the Employer invited Bids for "**THE WORK OF "RECONSTRUCTION OF MARAR ROAD AND G. V. IYYER ROAD WITH CC PAVER BLOCKS, RCC DRAINS, BOX CULVERTS, UTILITY DUCTS, ETC., AT W/ISLAND"** (hereinafter called "The Work") vide Tender Notice No..... and the Contractor submitted a Bid for the same giving percentages subject to the terms and conditions etc. of the Bid Document.

AND WHEREAS the said Bid submitted by the Contractor has been accepted by the Employer vide Letter of Acceptance No. ....., issued to the Contractor while accepting their Bid.

NOW THESE PRESENTS WITNESSETH and the parties hereby agree as follows:

1. The Bid submitted by the Contractor for execution for the Board, of the Work specified in the underwritten Memorandum within the time specified in such

Memorandum at the percentages specified in the Schedule attached hereto and in accordance in all respects with the specifications, designs, drawings and instructions in writing referred to in Clause 16 of the "General Conditions of Contract" and with such materials as are provided for, by and in all other respects in accordance with such conditions, is accepted.

2. It is mutually understood and agreed that, notwithstanding that the Work has been sectioned, every part of it shall be deemed to be supplementary to and complementary of every other part and shall be read with it or into it.

3. The Contractor agreed to abide by and fulfil all the terms and provisions of the said Conditions of Contract or in default thereof, forfeit and pay to the Board, the sum of money mentioned in the said conditions.

4. The sum of Rs……./- [Rupees …….only) has been deposited by the Contractor with the Financial Adviser and Chief Accounts Officer of the Port Authority or furnished as Bank Guarantee as Performance Security: (a) the full value of which is to be absolutely forfeited to the Board in office without prejudice to any other rights or remedies of the said Board in office, should the Contractors fail to commence the Work specified in the underwritten Memorandum or should the Contractors not deposit the full amount of Performance Security specified in the underwritten Memorandum otherwise the said sum of Rs……./- shall be retained by the Board as on account of such Security Deposit as aforesaid; or (b) the full value of which shall be retained by the Board on account of the Security Deposit to execute all the works referred to in the Bid Documents upon the terms and conditions contained or referred to therein and to carry out such deviations as may be ordered, up to the maximum of the percentage mentioned in Clause 40.1 of the General Conditions of Contract and those in excess of that limit at the percentages to be determined in accordance with the provisions contained in Clause 40.3 of the General Conditions of Contract.

5. It is mutually agreed that the Bid submitted in its entirety shall form part of this Agreement. Apart from the Bid, the following shall also form part of the Agreement:
   (a) The Letter of Acceptance issued vide No. ……;
   (b) Price Bid submitted by the Contractor;
   (c) All documents submitted by the Contractor along with the Bid Document.
   (d) Replies to Pre-Bid Queries and Amendments issued;
   (e) Letters exchanged between the Employer and the Bidder upto the issue of Letter of Acceptance as annexed here to
      (i) ……. and
      (ii) ……

(iii) ……..
(iv) ……..

M E M O R A N D U M

a)	General description of work	:	**RECONSTRUCTION OF MARAR ROAD AND G. V. IYYER ROAD WITH CC PAVER BLOCKS, RCC DRAINS, BOX CULVERTS, UTILITY DUCTS, ETC., AT W/ISLAND**
b)	Estimated cost	:	**Rs.8,44,82,800/-**
c)	Tendered cost	:	
d)	Earnest Money	:	**Rs.16,89,700/-**
e)	Security Deposit	:	10% of the value of the contract awarded or the value of the work done whichever is higher [Performance Guarantee @5% and Retention Money @5%]
f)	Percentage, if any, to be deducted from the bills	:	The Retention Money will be recovered from the first running bill onwards at the rate of 5% of the gross amount of each bill.
g)	Time allowed for commencement of work from the date of issue of work order through email	:	15 days
h)	Time allowed for the work from the date of commencement of work.	:	**9 (Nine) months**
i)	Schedule, specifications, conditions, drawings etc. as per contents sheet attached.	:	

IN WITNESS WHEREOF THE CONTRACTOR hereunto set his hand and seal on behalf of M/s……and on behalf of THE BOARD OF MAJOR PORT AUTHORITY FOR COCHIN PORT, the CHIEF ENGINEER has set his hand and seal and common seal of Cochin Port Authority has been hereunto affixed the day and year first written above.

Signed, sealed and delivered by

Sri. ……,
M/s. .....,
.....,

…….

CONTRACTOR

(COMMON SEAL OF THE FIRM)

Signed and affixed seal in the presence of

1) Signature with address :

2) Signature with address :

Signed, sealed and delivered by

THE CHIEF ENGINEER,

Cochin Port Authority
on behalf of The Board of Major
Port Authority for Cochin Port EMPLOYER
Signed and affixed the common seal of
The Board of Major Port Authority for Cochin Port
In the presence of
1)
2)

COCHIN PORT AUTHORITY

SECTION - I

3. CONTRACT DATA

[***To be filled up before issuing tender document as applicable for each tender]***

Items marked "N/A" do not apply in this Contract.

Sl. No.	Description				Reference Clause No. in GCC
	The following documents are also part of the Contract				
1.	The Schedule of other Contractors (Will be informed in due course)				(8.2)
	The Schedule of Key personnel				(9)
	Designation/ Qualification of Staff	No.	Min. Experience (Years)	Rate of recovery in case of non-compliance during the entire contract period	
	i) Project Manager (Civil) Graduate Engineer	1	5 (and having experience in one similar work)	Rs.25,000/- per month	
	ii) Quality Engineer (Civil) Graduate Engineer or Civil Diploma Engineer	1	2 5	Rs.15,000/- per month	
	iii) Project / Planning/Billing (Civil) Graduate Engineer or Civil Diploma Engineer	1	2 5	Rs.15,000/- per month	
2.	The Employer is				(1)
	Board of Major Port Authority for Cochin Port,Cochin -9				
3.	Name of Authorized Representative:				
	Name: **Sri. Dr. M. Angamuthu, IAS**				

Sl. No.	Description	Reference Clause No. in GCC
	Chairperson, **Cochin Port Authority,** **Cochin -9.**	
4.	The Engineer is	
	Name: **Col. Jassar S M,** **Chief Engineer,** **Cochin Port Authority,** **Cochin-9.**	
5.	Name of Nominee(s) is**: Will be notified in LoA/ LoI**	
6.	Name of Contract: **Reconstruction of Marar Road and G. V. Iyyer Road with CC Paver Blocks, RCC Drains, Box Culverts, Utility Ducts, etc., at W/Island** Tender No**: T10/T-2117/2026-C**	(1)
7.	**13** copies of Contract Agreement shall be furnished by the Contractor	(7.1)
8.	Tender document and other data are available at the following websites : 1) www.cochinport.gov.in 2) www.tenders.gov.in 3) tenderwizard.com/copt	(7.2)
9.	The Intended completion Date for the whole of the Work is **9 (Nine) Months** with the following milestones:	(17, 28)
	Physical works to be completed: Period from the date of commencement of work The activity wise schedule needs to be submitted by the contractor within **21 days** of receipt of LoA from CoPA. This need to be strictly followed for the timely completion of the project.	
10.	The following shall form part of the Contract Document: (1) Agreement (2) Letter of Acceptance (3) Price Bid/Bill of Quantities (4) Contractor's Bid (5) Correspondence exchanged after the opening of the Bid and before the issue of Letter of Acceptance by which the Condition of Contract are amended, varied or modified in any way by mutual consent (to be enumerated). (6) Contract Data (7) General Conditions of Contract	(2.3)

Sl. No.	Description	Reference Clause No. in GCC
	(8) General Description and Special Conditions of Contract (9) Technical Specifications (10) Drawings and (11) Any other documents listed in the Contract Data as forming part of the Contract.	
11.	The Contractor shall submit a Program for the Works within **21 days** of date of the Letter of Acceptance/LoI.	(27)
12.	**The site possession date** The site will be handed over in phases within **7 days** after issue of LoA/ LoI and the site is free from encumbrances.	(21)
13.	The start date shall be **15 days f**rom the date of issue of the Letter of Acceptance (LoA)/ LoI through email by the Contractor.	(1)
14.	The site is located in the Willingdon Island. **Project Location** is shown in drawing no. 9790-01-2026	
15.	The Defects Liability Period is **One year from the date of completion of the work.**	(36)
16.	The minimum insurance cover for physical property, injury and death is **Rs.15 lakhs (Rupees Fifteen Lakhs)** per occurrence with the number of occurrences unlimited. After each occurrence, Contractor will pay additional premium necessary to make insurance valid always.	**(13)**
17.	The following events shall also be Compensation Events: (Nil)	(44)
18.	The period between Programme updates shall be 45 days.	(27)
19.	The amount to be withheld for late submission of an updated Programme shall be Rs.25,000/-.	(27)
20.	The language of the Contract documents is **English.**	(3)
21.	The law, which applies to the Contract, is the law of Union of India.	(3)
22.	The currency of the Contract is **Indian National Rupees.**	(46)
23.	The proportion of payments retained (retention money) shall be 5% from each bill subject to a maximum of 5% of the contract price or cost of work done whichever is higher.	(48)
24.	The maximum amount of liquidated damages for the whole of the works is **10%** of the contract price.	[49]
25.	Amounts of the advance payments-Advance payments as applicable to the contract are:	[51]

	Nature of Advance	Amount (Rs)	Conditions to be fulfilled	

Sl. No.	Description			Reference Clause No. in GCC
	1. Mobilization	Upto 10% of the Contract price in two equal instalments of 5%.	On submission of Unconditional Bank Guarantee for 110% of Advance Amount.	
	2.Equipment (Plant and Machinery)	**NA**	**NA**	
	3.Secured Advance for non-perishable Materials brought to site	75% of Invoice value or Market value whichever is Lower.	a) The non-perishable materials, in accordance with Tender specification	
			b) Such materials have been delivered to site and are properly stored and protected against damage or deterioration to the satisfaction of the Engineer or his nominee. The contractor shall store the bulk material in measurable stacks.	
			c) The Contractor's records of the requirements, orders, receipt and use of materials are kept in a form approved by the Engineer or his nominee and such records shall be	

Sl. No.	Description	Reference Clause No. in GCC
	available for inspection by the Engineer or his nominee.	
26.	(The advance payment will be paid to the Contractor not later than 15 days after fulfilment of the above conditions)	
27.	Repayment of advance payment for mobilisation:	[51]
	The advance loan shall be repaid with percentage deductions from the interim payments certified by the Engineer or his nominee under the Contract. Deductions shall commence in the next Interim Payment Certificate following that recovery of Mobilization advance will start when 15% of the work is executed and recovery of total advance should be completed by the time 80% of the original Contract work is executed.	
28.	Repayment of advance payment for Construction and equipment: **NA**	[51]
29.	Repayment of secured advance:	
	The advance shall be repaid from each succeeding monthly payment to the extent materials for which advance was previously paid pursuant to Clause 51.6 of Conditions of Contract on being incorporated into the Works.	
30.	The date by which "as-built" drawings are required is within 60 days of issue of certificate of completion of whole or section of the work, as the case may be.	(58)
31.	The amount to be withheld for failing to supply "as built" drawings and/or operating and maintenance manuals by the date required is Rs.1,00,000/-	(58)
32.	Schedule of Rates Applicable: **(i) DSR 2023 multiplied with 0.8246 (for eliminating GST component) + 35% as Cost indices for Civil works**	
33.	Base Rate for materials to be considered for price variation:	**(47)**
	Price variation is not applicable.	
34.	Permissible wastage on theoretical quantities of a) Cement: (+) 2.0% b) Steel Reinforcement: (+)5.99%	**(47)**

COCHIN PORT AUTHORITY
SECTION - I

6. ANNEXURES

Annexure	Description	Page No.
1	Letter of Submission - Covering Letter	50
2	Proforma of Power- of-Attorney/Letter of Authority	51-52
3	Organization Details	53-54
4(a)	Eligible Assignment Details for MEC	55-56
4(b)	Details of past experience of Contractors for Similar Works	57
5	Financial Capability	58
6	Details of Proposed Approach & Methodology	59
7	Plant and Equipment Proposed for the Work	60
8	Declaration	61
9	Format for Furnishing Bank information for e-payment	62
10	Undertaking Regarding EPF and ESI Registration	63
11	Details of Litigation History	64-66
12	Proforma of Pre-Contract Integrity Pact	67-72
13	Proforma of Irrevocable Bank Guarantee for Bid Security/ Earnest Money Deposit	73-74
14	Format of Insurance Surety Bond towards EMD	75-76
15	NEFT/ RTGS Mandate Form of EMPLOYER	77

Annexure-1

COCHIN PORT AUTHORITY

RECONSTRUCTION OF MARAR ROAD AND G. V. IYYER ROAD WITH CC PAVER BLOCKS, RCC DRAINS, BOX CULVERTS, UTILITY DUCTS ETC., AT W/ISLAND

LETTER OF SUBMISSION- COVERING LETTER

(***On the letter head of the Bidder)***

Date:

To

The Chief Engineer,
Cochin Port Authority.

Sir,

Sub: Tender for **RECONSTRUCTION OF MARAR ROAD AND G. V. IYYER ROAD WITH CC PAVER BLOCKS, RCC DRAINS, BOX CULVERTS, UTILITY DUCTS ETC., AT W/ISLAND.**

Being duly authorized to represent and act on behalf of …… (Hereinafter referred to as "the Bidder") and having reviewed and fully understood all of the requirements of the bid document and information provided, the undersigned hereby apply for the project referred above.

We are submitting our Bid enclosing the following, with the details as per the requirements of the Bid Document, for your evaluation.

(i) Power of Attorney (***Annexure-2***)
(ii) Bid Security/EMD In the form of DD bearing No ----------dated -------, for Rs……. Issued by ……. bank / in the form of BG as per ***Annexure-13***/ in the form of ISB as per ***Annexure-14***.
(iii) Pre-Contract Integrity Pact (***Annexure-12***)

We have also uploaded the following documents for online submission of Technical Bid.

(i) Tender Document along with Addendum No ----, duly signed and sealed,
(ii) Organization Details (***Annexure-3***)
(iii) Details to fulfil the "Minimum Eligibility Criteria" and certificates (***Annexure-4a***) & Details of Past Experience of Contractor for Similar works ***Annexure-4b***)
(iv) Average Financial turnover over the last three financial year (***Annexure-5***)
(v) Detailed method statement (Technical Note) (***Annexure-6***)
(vi) List of plant and equipment (***Annexure-7***)
(vii) Declaration (***Annexure -8***)

(viii) Bank Details (***Annexure-9***)
(ix) Undertaking reg. EPF & ESI (***Annexure-10***)
(x) Details of litigation history / blacklisting of the bidder (***Annexure-11***)

Signature with Seal
(Authorized Signatory)

Annexure- 2

PROFORMA OF POWER- OF-ATTORNEY/ LETTER OF AUTHORITY
(To be submitted on Non-judicial Stamp Paper of appropriate value)

To

The Chief Engineer,
Cochin Port Authority,
Cochin 682009.
Kerala, India.

Dear Sir,

We_____ _____do hereby confirm that Mr./Ms./Messrs_____ [***INSERT NAME AND ADDRESS]***, whose signature is given below, is /are authorized to represent us to bid, negotiate and conclude the agreement on our behalf with you against Tender for **Reconstruction of Marar Road and G. V. Iyyer Road with CC Paver Blocks, RCC Drains, Box Culverts, Utility Ducts, etc., at W/Island (Tender No.T10/T-2117/2026- C).**

We confirm that we shall be bound by all and whatsoever our said agents shall commit.

Signature of the authorized person:
Name & Designation :

Yours faithfully,

Signature, name and seal of the certifying authority

Annexure - 3

COCHIN PORT AUTHORITY

RECONSTRUCTION OF MARAR ROAD AND G. V. IYYER ROAD WITH CC PAVER BLOCKS, RCC DRAINS, BOX CULVERTS, UTILITY DUCTS, ETC., AT W/ISLAND

ORGANIZATION DETAILS

CONTRACT No.:

NAME OF APPLICANT:

1. Name of the Owner:

2. Address:

   Telephone No. :

   Mobile No. :

   Email ID :

3. Description of Applicant
   (For e.g. General, Civil Engineering Contract etc.)

4. Registration and Classification of Contractors

5. Name and address of bankers

6. Number of years of experience as a general contractor :-

   In own Country:

Internationally:

7. Number of years of experience as a sub contractor

8. Name and Address of partners or associated companies to be involved in the project and whether Parent/ Subsidiary/other

6. Name and address of any associates Knowledgeable in the procedures of customs, immigration and local experience in various aspect of the project etc.

10. Name and address of the companies/ Sub-contractors who will be involved in the execution of works, namely:

11. Attach organization chart showing the structure of the company including names of Directors/ Key Personnel at Head Office who would be responsible for the project and a separate chart showing proposed Site Construction Organization.

.

Signature with Seal
(Authorized Signatory)

Annexure – 4(a)

COCHIN PORT AUTHORITY

RECONSTRUCTION OF MARAR ROAD AND G. V. IYYER ROAD WITH CC PAVER BLOCKS, RCC DRAINS, BOX CULVERTS, UTILITY DUCTS, ETC., AT W/ISLAND

Tenderer shall furnish Details of "Eligibility Works Experience" as per Clause 12 of Minimum Eligible Criteria (MEC) of Instruction to Tenderer and certificates in the following format (Client Certificates/work completion certificates or any other documentary evidences with respect to the eligibility work)

ELIGIBLE ASSIGNMENT DETAILS FOR MEC

Assignment Number:

Description	Bidder to fill up the details here
Name and Address of the Client	
Title of the Eligible Assignment	
Date of completion of the Eligible Assignment	
Project Completion Cost	
Reference No. of the enclosed Client Completion Certificate/ Documentary Evidence for having successfully completed the Eligible assignment	
Name, telephone no, telefax no and email address of the client's representative	
Description and Scope of Work	

Instructions:

i) Bidders are expected to provide information in respect of Eligible Assignments in this Section. The assignments cited must comply with the criteria specified Clause No. 12 (a) Minimum Eligibility of the Instructions to Tenderers".

ii) A separate sheet should be filled for each of the eligible assignments.

iii) The details are to be supplemented by documentary proof from the respective client /owner for having carried out such assignment duly certified by clients/ owner.

iv) The works indicated in this ***Annexure-4(a)*** will be only being considered for evaluation. Mere submission of work completion certificate will not be considered as Eligible Assignments

v) Original or notary certified copy of completion certificates of each work issued by the owner/ the responsible officers of the owner under whom he has executed such contracts shall be attached. The certificate shall invariably contain the following among other things.

   a) Details of work involved specifying the nature of work
   b) The completion cost of the work and
   c) Date of commencement; and
   d) Date of completion of the work.

vi) If the experience in similar works is as a subcontractor, notary attested copy(s) of approval issued by the Employer(s) authorizing as a sub-contractor; in proof of the claim of the tenderer as a sub-contractor shall be attached.

vii) If the experience in similar work is in works executed in private sectors/organizations, the TDS certificate along with notary attested copy(s) work order and completion certificate shall be attached.

viii) The tenderer is also obliged to produce the original of the certified copy(s) on request by the department.

Signature with Seal
(Authorized Signatory)

Annexure – 4(b)

COCHIN PORT AUTHORITY

RECONSTRUCTION OF MARAR ROAD AND G. V. IYYER ROAD WITH CC PAVER BLOCKS, RCC DRAINS, BOX CULVERTS, UTILITY DUCTS, ETC., AT W/ISLAND

DETAILS OF PAST EXPERIENCE OF CONTRACTORS FOR SIMILAR WORKS

Sl. No.	Name & Location of Project	Owner's Complete address. with contact Person	Value of Contract	Duration of Contract			Details of work including major items of work involved	Reference No. & Date of letter of intent & completion certificate enclosed	Details of Payment Received
				Comme-ncement date	Scheduled completion date	Actual completion date			
1	2	3	4	5	6	7	8	9	10
1									
2									
3									
4									

Note: Bidder to enclose completion certificate issued by owner, certified by a Notary public or equivalent certifying authority.

Signature

Certified by the Chartered Accountant
[With UDIN and QR Code (if available)]

Signature with Seal
(Authorized Signatory)

Annexure- 5

COCHIN PORT AUTHORITY

RECONSTRUCTION OF MARAR ROAD AND G. V. IYYER ROAD WITH CC PAVER BLOCKS, RCC DRAINS, BOX CULVERTS, UTILITY DUCTS, ETC., AT W/ISLAND

FINANCIAL CAPABLITY

(A) **Average Annual Turnover of the Bidder**

Turnover (Rs.)			
Year -1 (2024-25)	**Year -2 (2023-24)**	**Year -3 (2022-23)**	**Average Annual Turnover**

Instructions:

(i). Year 1 will be the Financial Year-2024-25. Year 2 shall be the year immediately preceding Year 1 and Year 3 shall be the year immediately preceding Year 2.

(ii). The Bidder shall provide audited Annual Reports / Audited financial statements such as balance sheets and profit & loss account statements as required under this Bid Document.

(iii). Annual turnover of the bidder shall be submitted duly verified by Charted Accountant or Competent Authority.

Certified by Chartered Accountant
UDIN: …….

Signature with Seal
(Authorized Signatory)

Annexure - 6

COCHIN PORT AUTHORITY

RECONSTRUCTION OF MARAR ROAD AND G. V. IYYER ROAD WITH CC PAVER BLOCKS, RCC DRAINS, BOX CULVERTS, UTILITY DUCTS, ETC., AT W/ISLAND

DETAILS OF PROPOSED APPROACH & METHODOLOGY

Bidder shall furnish a detailed method statement (Technical Note) for carrying out of the works, along with a construction programme [Preferably in MS project / Primavera] showing sequence of operation and the time frame for various segments of temporary and permanent works showing critical path of activities.

Signature with Seal
(Authorized Signatory)

Annexure - 7

COCHIN PORT AUTHORITY

RECONSTRUCTION OF MARAR ROAD AND G. V. IYYER ROAD WITH CC PAVER BLOCKS, RCC DRAINS, BOX CULVERTS, UTILITY DUCTS, ETC., AT W/ISLAND

PLANT AND EQUIPMENT PROPOSED FOR THE WORK

Please indicate the main plant and equipments considered to be necessary and proposed to be deployed for undertaking this work and whether this plant is ready in ownership or will be purchased or hired.

Sl. No.	Description of equipment	Requirement No. / Capacity	Owned / leased / to be procured	Nos / Capacity	Age / Condition	Remarks (From whom to be purchased)	At what Stage of contract period the Equipment will be available

Signature with Seal
(Authorized Signatory)

Annexure - 8

COCHIN PORT AUTHORITY

RECONSTRUCTION OF MARAR ROAD AND G. V. IYYER ROAD WITH CC PAVER BLOCKS, RCC DRAINS, BOX CULVERTS, UTILITY DUCTS, ETC., AT W/ISLAND

DECLARATION

We M/s.....*(Name & address of the bidder)* hereby declare that:-

(i) All details regarding construction plant, temporary work and personnel for site organization considered necessary and sufficient for the work have been furnished in the ***Annexure-7*** and that such plant, temporary works and personnel for site organization will be available at the site till the completion of the respective work.

(ii) No conditions are incorporated in the financial bid. In case any conditions are specified in the financial bid, the tender will be rejected summarily without making any further reference to the bidder.

(iii) We have not made any payment or illegal gratification to any persons/ authority connected with the bid process so as to influence the bid process and have not committed any offence under PC Act in connection with the bid.

(iv) We disclose with that we have * made / not made payments or propose to be made to any intermediaries (agents) etc. in connection with the bid.

(v) We do hereby confirm that no changes have been made in the tender document downloaded and submitted by us for the above bid. Port Tender document will be treated as authentic tender and if any discrepancy is noticed at any stage between the Port's tender document and the one submitted by the tenderer, the Port's document shall prevail.

Signature with Seal
(Authorized Signatory)

**** Note: (i) Delete whichever is not applicable.***
(ii) The above Declaration shall be submitted in the Letter head

Annexure-9

FORMAT FOR FURNISHING BANK INFORMATION FOR e-PAYMENT

1	Name and full address of the beneficiary	
2	Credit Account No. (Should be full 14 digit)	
3	Account Type (SB or CA or OD)	
4	Name of the Bank	
5	Branch (Full address with telephone No.)	
6	MICR code (Should be 9 digit)	
7	Telephone/Mobile/Fax No. of the beneficiary	Telephone :
		Mobile :
		Fax :
8	Cancelled Cheque Enclosed	

Signature with seal
(Authorized Signatory)

Annexure - 10

COCHIN PORT AUTHORITY

RECONSTRUCTION OF MARAR ROAD AND G. V. IYYER ROAD WITH CC PAVER BLOCKS, RCC DRAINS, BOX CULVERTS, UTILITY DUCTS, ETC., AT W/ISLAND

UNDERTAKING REGARDING EPF AND ESI REGISTRATION

I/ We, M/s. ……..*(Name & address of the Tenderer)* solemnly affirm and undertake that I/We do not have the required number of employees for taking registration under EPF Organisation and ESI Corporation. I/We also undertake that I/We take the full responsibility for all the consequences arising due the above and indemnify CoPA officials for any actions taken in this regard.

Signature with seal
(Authorized Signatory)

Annexure-11

LITIGATION HISTORYAND DETAILS OF BLACK LISTING

(A). Details of Litigation History till 30th September, 2026 in accordance with clause 22.1(r) of Instruction to Bidders are as follows:

Sl No	**Date, month & Year of award**	**Amount of Award, INR**	**Contract Identification**	**Total Contract Amount INR**
1	*[insert date]*	*[insert amount]*	*Contract Identification: [indicate complete contract name, number, date and any other identification]* *Name of Employer: [insert full name]* *Address of Employer: [insert street/city/country]* *Matter in dispute: [indicate main issues in dispute]* *Party who initiated the dispute: [indicate "Employer" or "Contractor"]* *Status of dispute: [Indicate if it is being treated by the Adjudicator, under Arbitration or being dealt with by the Judiciary]*	*[insert amount]*
2				
3				

(B). Details of Black listing/ debarring by the Govt. departments for last 5 years till 30th September, 2026:

Sl. No	Date, month & year of Black listing / de barring	Name of Agency Black listed / debarred	Period of Black listing / de barring	Ending date of Black listing / de barring
1	*[insert date, month & year]*	*[insert name and place of agency]*	*[insert period in years& months]*	*[insert date, month & year]*
2				

(C). Details of Pending Litigation up to 30th September, 2026:

Sl.No.	Date, month & Year of award	Amount of Award, INR	Contract Identification	Total Contract Amount INR
1	*[insert date]*	*[insert amount]*	*Contract Identification: [indicate complete contract name, number, date and any other identification]* *Name of Employer: [insert full name]* *Address of Employer: [insert street/city/country]* *Matter in dispute: [indicate main issues in dispute]* *Party who initiated the dispute: [indicate "Employer" or "Contractor"]* *Status of dispute: [Indicate if it is being treated by the Adjudicator, under Arbitration or being dealt with by the Judiciary]*	*[insert amount]*
2				

Certified that the above information is correct as per records and nothing has been omitted / concealed.

……(Signature of the Statutory Auditor)

…… (Full Name of the Statutory Auditor)

…… (Name of the Statutory Auditor's Firm)

…… (Complete Address of the Statutory Auditor's Firm)

…… (Telephone/fax numbers, including country and city codes)

…… (E-mail of the Statutory Auditor)

…… (Seal of the Statutory Auditor)

Membership No. of the Statutory Auditor: ……

Notes:

(i) The Tenderer shall provide accurate information about any litigation or arbitration resulting from contracts completed or ongoing under its execution over the last three years.

(ii) This may be noted that under this category only cases of arbitration /litigation finally settled against the Tenderer should be listed. If the case is pending at any level of arbitration or judiciary, the same should be listed in Pending Litigation and NOT under Litigation History. A consistent history of awards against the Tenderer may result in failure of the Application/Tender.

Date:

Signature with seal
(Authorized Signatory)

Annexure-12

PROFORMA OF PRE-CONTRACT INTEGRITY PACT

Between Cochin Port Authority hereinafter referred to as "**The Principal**," and _____ hereinafter referred to as "**The Bidder/ Contractor**."

Preamble

The Principal intends to award contract/s for_____, under laid down organisational procedures, The Principal values full compliance with all relevant laws of the land, rules, regulations, economical use of resources, and fairness / transparency in its relations with its Bidder(s) and / or Contractor(s).

To achieve these goals, the Principal shall appoint Independent External Monitors (IEMs) who shall monitor the tender process and the execution of the contract for compliance with the abovementioned principles.

Section 1 – Commitments of the Principal:

1)The Principal commits itself to take all measures necessary to prevent corruption and to observe the following principles: -

a. No employee of the Principal, personally or through family members, shall in connection with the tender for, or the execution of a contract, demand, take a promise for or accept, for self or third person, any material or immaterial benefit which the person is not legally entitled to.

b. The Principal shall treat all Bidder(s) with equity and reason during the tender process. The Principal shall, in particular, before and during the tender process, provide to all Bidder(s) the same information and shall not provide to any Bidder(s) confidential / additional information through which the Bidder(s) could obtain an advantage in the tender process or the contract execution.

c. The Principal shall exclude from the process all known persons having conflict of interest.

2) If the Principal obtains information on the conduct of any of its employees which is a criminal offence under the IPC/PC Act, or if there be a substantive suspicion in this regard, the Principal shall inform the Chief Vigilance Officer and in addition shall initiate disciplinary proceedings.

Section 2 – Commitments of the Bidder(s)/ Contractor(s):

1) The Bidder(s)/ Contractor(s) commits themselves to take all measures necessary to prevent corruption. The Bidder(s)/ Contractor(s) commits themselves to observe the following principles during participation in the tender process and the contract execution.

a. The Bidder(s)/ Contractor(s) shall not, directly or through any other person or firm, offer, promise, or give to any of the Principal's employees involved in the tender process or the execution of the contract or to any third person any material or other benefit which they are not legally entitled to, in order to obtain in exchange any advantage of any kind whatsoever during the tender process or the execution of the contract.

b. The Bidder(s)/ Contractor(s) shall not enter with other Bidders into any undisclosed agreement or understanding, whether formal or informal, in violation of the ***Annexure-11***: Integrity Pact Format 245 Competition Act, 2002 (as amended from time to time). This applies in particular to prices, specifications, certifications, subsidiary contracts, submission or non submission of bids or any other actions to restrict competitiveness or to introduce cartelisation in the tender process.

c. The Bidder(s)/ Contractor(s) shall not commit any offence under the relevant IPC/PC Act; further, the Bidder(s)/ Contractor(s) shall not use improperly, for purposes of competition or personal gain, or pass on to others, any information or document provided by the Principal as part of the business relationship, regarding plans, technical proposals, and business details, including information contained or transmitted electronically.

d. The Bidder(s)/Contractors(s) of foreign origin shall disclose the name and address of the Agents/representatives in India, if any. Similarly, the Bidder(s)/Contractors(s) of Indian Nationality shall furnish the name and address of the foreign principals, if any. Further details, as mentioned in the "Guidelines on Indian Agents of Foreign Suppliers," shall be disclosed by the Bidder(s)/Contractor(s). Further, as mentioned in the Guidelines, all the payments made to the Indian agent/representative must be in Indian Rupees only. Copy of the "Guidelines on Indian Agents of Foreign Suppliers" is placed on Annex hereto.

e. The Bidder(s)/ Contractor(s) shall, when presenting their bid, disclose any and all payments made, is committed to, or intends to make to agents, brokers, or any other intermediaries in connection with the award of the contract.

f. Bidder(s) /Contractor(s) who have signed the Integrity Pact shall not approach

the Courts while representing the matter to IEMs and shall wait for their decision.

2) The Bidder(s)/ Contractor(s) shall not instigate third persons to commit offences outlined above or be an accessory to such offences.

Section 3 - Disqualification from the tender process and exclusion from future contracts;

If the Bidder(s)/ Contractor(s), before award or during execution, has committed a transgression through a violation of Section 2, above or in any other form such as to put their reliability or credibility in question, the Principal is entitled to disqualify the Bidder(s)/ Contractor(s) from the tender process or take action as per laid down procedure to debar the Bidder(s)/ Contractor(s) from participating in the future procurement processes of the Government of India.

Section 4 – Compensation for Damages:

1) If the Principal has disqualified the Bidder(s) from the tender process before the award according to Section 3, the Principal is entitled to demand and recover the damages equivalent to Earnest Money Deposit/ Bid Security.

2) If the Principal has terminated the contract according to Section 3, or if the Principal is entitled to terminate the contract according to Section 3, the Principal shall be entitled to demand and recover from the Contractor liquidated damages of the Contract value or the amount equivalent to Performance Bank Guarantee.

Section 5 – Previous transgression:

1) The Bidder declares that no previous transgressions occurred in the last three years with any other Company in any country conforming to the anti-corruption approach or with any Public Sector Enterprise in India that could justify his exclusion from the tender process.

2) If the Bidder makes an incorrect statement on this subject, the Principal shall act like para 2) of Section 4 above.

Section 6 – Equal treatment of all Bidders / Contractors / Subcontractors:

In the case of Sub-contracting, the Principal Contractor shall take responsibility for adopting the Integrity Pact by the Sub-contractor.

a. The Principal shall enter into agreements with identical conditions as this one

with all Bidders and Contractors.

b. The Principal shall disqualify from the tender process all bidders who do not sign this Pact or violate its provisions.

Section 7 – Criminal charges against violating Bidder(s) / Contractor(s) / Subcontractor(s):

If the Principal obtains knowledge of the conduct of a Bidder, Contractor, or Subcontractor, or of an employee or a representative or an allied firm of a Bidder, Contractor or Subcontractor which constitutes corruption, or if the Principal has substantive suspicion in this regard, the Principal shall inform the same to the Chief Vigilance Officer.

Section 8 – Independent External Monitor:

1) The Principal/ EMPLOYER has appointed the following panel of Independent Monitors (hereinafter referred to as Monitors) for this Pact in consultation with the Central Vigilance Commission:

(i) Shri. Harishwar Dayal, IDSE (Rtd.),
H-2, Lawyer Colony, Bypass Road,
Agra-282005 (UP),
Mobile No:9412095786
Email: dayalagra@gmail.com

(ii) Shri. Deepak Chaturvedi, ITS (Retd)
Flat No.1, Sanchar Vihar,
C-58/4, Sector-62,
Uttar Pradesh, Noida-201301.
Mobile No:9930408711
Email ID :chaturvedideep@rediffmail.com

The task of the Monitor is to review independently and objectively whether and to what extent the parties comply with the obligations under this agreement.

2) The Monitor is not subject to instructions by the parties' representatives and performs their functions neutrally and independently. The Monitor would have access to all Contract documents whenever required. It shall be obligatory for them to treat the information and documents of the Bidders/Contractors as confidential. They report to the Management of the Principal.

3) The Bidder(s)/Contractor(s) accepts that the Monitor has the right to access

without restriction, all Project documentation of the Principal, including that provided by the Contractor. Upon their request and demonstration of a valid interest, the Contractor shall also grant the Monitor unrestricted and unconditional access to their project documentation. The same applies to Sub-contractors.

4) The Monitor is under contractual obligation to treat the information and documents of the Bidder(s)/ Contractor(s)/ Sub-contractor(s) with confidentiality. The Monitor has also signed declarations on 'Non-Disclosure of Confidential Information' and 'Absence of Conflict of Interest.' In case of any conflict of interest arising later, the IEM shall inform the Management of the Principal and recuse themselves from that case.

5) The Principal shall provide the Monitor with sufficient information about all meetings among the parties related to the Project, provided such meetings could impact the contractual relations between the Principal and the Contractor. The parties offer the Monitor the option to participate in such meetings.

6) As soon as the Monitor notices, or believes to notice, a violation of this agreement, they shall inform the Management of the Principal and request the Management to discontinue or take corrective action or other relevant action. The Monitor can, in this regard, submit non-binding recommendations. Beyond this, the Monitor has no right to demand from the parties that they act in a specific manner, refrain from action, or tolerate action.

7) The Monitor shall submit a written report to the Management of the Principal, within 8 to 10 weeks from the date of reference or intimation to him by the Principal and, should the occasion arise, submit proposals for correcting problematic situations.

8) If the Monitor has reported to the Management of the Principal a substantiated suspicion of an offence under the relevant IPC/ PC Act, and the Management of the Principal has not, within the reasonable time, taken visible action to proceed against such offence or reported it to the Chief Vigilance Officer, the Monitor may also transmit this information directly to the Central Vigilance Commissioner.

9) The word 'Monitor' would include both singular and plural.

Section 9 – Pact Duration:

This Pact begins when both parties have legally signed it. It expires for the Contractor 12 months after the last payment under the contract, and for all other Bidders, 6 months after the contract has been awarded. Any violation of the same would entail disqualifying the bidders and exclusion from future business dealings.

If any claim is made / lodged during this time, the same shall be binding and continue to be valid despite the lapse of this Pact as specified above, unless it is discharged / determined by the Management of the Principal.

Section 10 – Other provisions:

1) This agreement is subject to Indian Law. The place of performance and jurisdiction is the place from where the Tender/ Contract is issued.

2) Changes, supplements, and termination notices must be submitted in writing. Side agreements have not been made.
3) If the Contractor is a partnership or a consortium, this agreement must be signed by all partners or consortium members.

4) Should one or several provisions of this agreement turn out to be invalid, the remainder of this agreement remains valid. In this case, the parties shall strive to come to an agreement according to their original intentions.

5) Issues like Warranty / Guarantee, etc., shall be outside the purview of IEMs.

6) In the event of any contradiction between the Integrity Pact and its Annex, the Clause in the Integrity Pact shall prevail.

_____ _____

(For & On behalf of the Principal) (For and on behalf of Bidder/ Contractor)

(Office Seal) (Office Seal)

Place ---------- Date ----------

Witness1:_____Witness2:_____
(Name &Address) (Name & Address)

Annexure- 13

PROFORMA OF IRREVOCABLE BANK GUARANTEE FOR EARNEST MONEY DEPOSIT

(To be submitted on Non-judicial Stamp Paper of appropriate value)

B.G. No. _____ Dated _____.

This Deed of Guarantee executed at ———————— by _____ (Name of Bank) having its Head/Registered office at _____ _____ (hereinafter referred to as " the Guarantor") which expression shall unless it be repugnant to the subject or context thereof include its executors, administrators, successors and assigns;

In favour of

The Board of Major Port Authority for Cochin Port (hereinafter called "the EMPLOYER"), having its office at Willingdon Island, Cochin – 682 009, which expression shall unless it be repugnant to the subject or context thereof include its executors, administrators, successors and assigns;

Whereas M/s. _____ ., a Company registered under the provisions of _____ having its registered office at _____ (hereinafter called "the Bidder") which expression shall unless it be repugnant to the subject or context thereof include its executors administrators, successors and assigns, has bid for the work of **RECONSTRUCTION OF MARAR ROAD AND G. V. IYYER ROAD WITH CC PAVER BLOCKS, RCC DRAINS, BOX CULVERTS, UTILITY DUCTS, ETC., AT W/ISLAND (Tender No.T10/T-2117/2026-C**) (hereinafter referred to as "the Work").

Whereas in terms of the Tender Notice dated ——— (hereinafter referred to as "Tender Document") the Bidder is required to furnish to the Port Authority an unconditional and irrevocable Bank Guarantee for an amount of Rs. ……(Rupees …… only) as Earnest Money Deposit (EMD) and the Guarantor has at the request of the Bidder agreed to provide such Guarantee being these presents:

Now this deed witnesseth that in consideration of the premises, We, ———————— Bank hereby declare, undertake and agree as follows:

We as primary obligor shall, without demur, pay to the Port Authority an amount not exceeding Rs. ……. (Rupees ……. only), within 5 days of receipt of a written demand from the Port Authority stating that the EMD has been forfeited in terms of Clause 18.1 of the Instruction of Bidders of

Tender Document. Any such demand made on us by the Port Authority shall be conclusive and absolute as regards the forfeiture of the EMD and the amount due and payable under this Guarantee.

(a) The above payment shall be made by us without any reference to the Bidder or any other person and irrespective of whether the claim of the Port Authority is disputed by the Bidder or not.

(b) This Guarantee shall remain in full force for a period of 225 days from (date)*_____ or for such extended period as may be mutually agreed between the Port Authority and the Bidder and shall continue to be enforceable till all amounts which are demanded by the Port Authority under this Guarantee are paid.

(c) In order to give full effect to this Guarantee, the EMPLOYER shall be entitled to treat the Guarantor as the principal debtor and the obligations of the Guarantor shall not be affected by any variations in the terms and conditions of the Tender Document or other documents or by extension of time of performance of any obligations by the Bidder or any postponement for any time of the powers exercisable by the EMPLOYER against the Bidder or forebear or enforce any of the terms and conditions relating to non-compliance of the Tender Document by the Bidder and we shall not be relieved from our obligations by reason of any variation or extension being granted to the Bidder or forbearance or omission on the part of the EMPLOYER or any indulgence by the EMPLOYER to the Bidder to give such matter or thing whatsoever which under the law relating to sureties would but for this provision have effect of so relieving us.

(d) This Guarantee shall be irrevocable and shall remain in full force and effect until all our obligations under this Guarantee are duly discharged.

(e) The Guarantor has power to issue this Guarantee and the undersigned is duly authorized to execute this Guarantee pursuant to the power granted under ——

In Witness whereof the Guarantor has set its hands hereunto on the day, month and year first hereinabove written.

Signed and Delivered by ————-

Bank by the hand of Shri————-

its ———————— and authorized official

*Fill in the scheduled date of submission of bid.

Annexure-14

Format of Insurance Surety Bond towards EMD
(To be stamped in accordance with Stamp Act of India)

[From the Insurance Company duly approved by Insurance Regulatory and Development Authority of India]

Insurance Surety Bond No.: **Date:**

To
The Chief Engineer,
Chief Engineers Office,
Cochin Port Authority,
W/Island, Cochin 682009
Kerala, India

Dear Sir,
In accordance with Invitation for Bids under your Bid Document No.T10/T-2117/2026-C, M/s…… (Supplier's Name) having its Registered/Head Office at (address) (hereinafter called the 'Supplier') wish to participate in the said bid for “Reconstruction of Marar Road and G. V. Iyyer Road with CC Paver Blocks, RCC Drains, Box Culverts, Utility Ducts, etc., at W/Island”.

As an irrevocable Insurance Surety Bond against EMD for an amount of .....(*) ……. valid for .... days from ……...(**) required to be submitted by the Supplier as a condition precedent for participation in the said bid which amount is liable to be forfeited on the happening of any contingencies as mentioned under the Bidding Documents.

We, the (Name of the Insurer) having our Head Office at (address of the Insurer) guarantee and undertake to pay immediately on demand by Cochin Port Authority (hereinafter called the 'Authority') the amount of ……..(*)…… without any reservation, protest, demand and recourse. Any such demand made by the 'Authority shall be conclusive and binding on us irrespective of any dispute or difference raised by the Supplier and/or any right/remedy available to the supplier in terms thereof.

This Insurance Surety Bond shall be unconditional as well as irrevocable and

shall remain valid up to.....(@) If any further extension of this Insurance.
Surety Bond is required, the same shall be extended to such required period (not exceeding one year on receiving instructions from M/s (Supplier's Name) on whose behalf this Insurance Surety Bond is issued. ‘

In witness where of the Insurer, through its authorised officer, has set its hand and stamp on this ……... day of …….. 2026……at…….

…….
(Signature)

…….
(Name)

…….....
(Designation with Insurer Stamp)

Authorised Vide Power of Attorney PoA No.....

Date…….

NOTE:

1. (*) The amount shall be as specified in the Price Bid.
   (**) This shall be the last date of bid submission deadline.
   (@) This date shall be thirty (30) days after the last date for which the bid is valid.
2. The Insurance Surety Bond shall be from an Insurer as per guidelines issued by Insurance Regulatory and Development Authority of India (IRDAI) as amended from time to time.
3. The Authority Shall be the Creditor, the Supplier shall be the Principal debtor and the Insurance company/Insurer shall be the Surety in respect of the Insurance Surety Bond to be issued by the Insurer.
4. The Insurance Surety Bond should be on non-judicial stamp paper/e-stamp paper of appropriate value as per Stamp Act prevailing in the state(s) where the Insurance Surety Bond is submitted or is to be acted upon or the rate prevailing in State where the Insurance Surety Bond is executed, whichever is higher. The Stamp Paper/e-stamp paper shall be purchased in the name of Supplier/Insurer issuing the Insurance Surety Bond.

Annexure 15

National Electronic Fund Transfer (NEFT/RTGS) Mandate Form		
(Mandate for receiving payment s through NEFT/RTGS from COCHIN PORT AUTHORITY)		
1	Vendor Name/Beneficiary Name	**COCHIN PORT AUTHORITY**
2	Vendor code	
3	**Permanent Account Number(PAN)**	**AAALC - 1134F**
4	**TAN NO**	**CHNC04095A**
5	**GST NO:**	**32AAALC1134F1ZZ**
6	Particulars of Bank Account	Savings Account
	A. Name of Bank	**STATE BANK OF INDIA**
	B. Name of Branch	Cochin Port Authority
	C. Branch Code	6367
	D. Address	Cochin Port Authority , Willingdon Island -682009
	E. City Name	Cochin
	F. Telephone No	2582614
	G. NEFT/IFSC Code	**SBIN0006367**
	H. SWIFT Code:	**SBININBB**
	I. 9.digit MICR code on the Cheque Book.	682002021
	J. Type of Account	Savings Account
	K. Account No.	**41401802288**
5	Vendor Email-id	cash@cochinport.gov.in

(Please enclose a photocopy of the Cancelled cheque to enable us to verify the details mentioned above)

We hereby declare that the particulars given above are correct and complete. If the transaction is delayed or lost because of incomplete or incorrect information. We would not hold the company responsible.

SD/-
FINANCIAL ADVISER &
CHIEF ACCOUNTS OFFICER
COCHIN PORT AUTHORITY

Bank Certificate

We certify that ……has current account No……..with us and we confirm that the details given above are correct as per our records

Date:

Place: Authorised Official of Bank

SECTION - II

COCHIN PORT AUTHORITY

CIVIL ENGINEERING DEPARTMENT

Tender No: **T10/T-2117/2026-C**

Tender for

RECONSTRUCTION OF MARAR ROAD AND G. V. IYYER ROAD WITH CC PAVER BLOCKS, RCC DRAINS, BOX CULVERTS, UTILITY DUCTS, ETC., AT W/ISLAND

SECTION -II

Sl. No.	Clause/ Sections	DESCRIPTION	Page No.
1	II (1)	General Conditions of Contract - Part A – G	85-136
2	II (2)	Form of Securities (Annexure-A, B & C)	138-145

SECTION -II
COCHIN PORT AUTHORITY

I (1). GENERAL CONDITIONS OF CONTRACT - PART A - G

Sl. No.	Part	DESCRIPTION	Page No.
1	A	Part A– General	85
2	B	Part B - Time Control	97
3	C	Part C - Quality Control	100
4	D	Part D - Cost Control	102
5	E	Part E - Finishing the Contract	114
6	F	Part F - Labour Laws and Miscellaneous Clauses	119
7	G	Part G - Salient features of some major laws applicable to establishments engaged in construction work.	134

SECTION - II

GENERAL CONDITIONS OF CONTRACT

TABLE OF CONTENTS

Sl. No.	Description	Page No.
A	**General**	
1	Definitions	85
2	Interpretation	87
3	Language and Law	88
4	Engineer or his nominee's Decisions	88
5	Delegation	88
6	Communications	88
7	Contract Agreement	88
8	Subcontracting	88
9	Personnel	89
10	Employer's & Contractor's Risks	89
11	Employer's Risks	90
12	Contractor's Risks	90
13	Insurance	90
14	Site Investigation Reports	91
15	Queries about the Contract Data	91
16	Contractor to Construct the works	91
17	The works to be completed by the Indented Completion Date	92
18	Approval by the Engineer or his nominee	92
19	Safety	92
20	Discoveries	93
21	Possession of the Site	93
22	Access to the Site	93
23	Instructions	93
24	Disputes	93
25	Settlement of Disputes & Arbitration	93
26	Computerized Measurement Book	95
B.	**Time Control**	
27	Program	97
28	Revised Program	98
29	Extension of the Intended Completion Date	98
30	Delays Ordered by the Engineer or his nominee	99
31	Management Meetings	99
32	Early warning	99
33	Force Majeure	100

Sl. No.	Description	Page No.
C	**Quality Control**	
34	Identify Defects	100
35	Tests	100
36	Defect Liability	101
D	**Cost Control**	
37	Bill of Quantities	102
38	Changes in the Quantities	102
39	Variations	103
40	Payments for Variations	103
41	Cash Flow Forecasts	104
42	Payment Certificates	104
43	Payments	105
44	Compensation Events	107
45	Rates for items to be inclusive of Taxes	108
46	Currencies	108
47	Price Adjustment	108
48	Retention	109
49	Liquidated Damages	110
50	Nominated Sub Contractors	111
51	Advance Payment	111
52	Securities	112
53	Removal of Craft or Plant which has Sunk	113
54	Contractor’s Temporary Moorings	113
55	Cost of Repairs	114
E	**Finishing the Contract**	
56	Completion	114
57	Taking Over	115
58	Final Account	116
59	Submission of ‘As-built drawings’	116
60	Termination	116
61	Payment upon Termination	117
62	Property	119
63	Release from Performance	119
F	**Labour Laws and Miscellaneous Clauses**	
64	Labour	119
65	Compliance with Labour Regulations	119
66	Safety, Security and Protection of the Environment	119
67	Insurance of Works and Contractor’s Equipment	120
68	War Risks Insurance	120
69	Royalties	120
70	Transport of Contractor’s Equipment or Temporary Works	121

Sl. No.	Description	Page No.
71	Transport of Materials or Plant	121
72	Labour Laws & Regulations	121
73	Life Saving Appliances and First Aid	125
74	Action in case work not done as per Specifications	125
75	Actions where no Specifications are specified	126
76	Bribes	126
77	Details to be Confidential	126
78	Contractor's Temporary works, office etc.	127
79	Submission of Reports, Returns etc	127
80	Water Supply	127
81	Power Supply	127
82	Taxes and Duties	128
83	Noise and Disturbance	128
84	Safety Code	129
85	Port Authority Rules	130
86	Execution of Work	130
87	Drawings and Designs	130
88	Monsoon Period	132
89	Reports	132
90	Completion Documents	133
91	Changes in Firm's Constitution to be intimated	133
92	Indemnities	133
G	**Salient Features of Some Major Laws Applicable to Establishments Engaged in Construction Work.**	134

GENERAL GUIDELINES

1. This book of “General Conditions of Contract (GCC) “is applicable to both types of tenders i.e. “Percentage rate tenders and item rate tenders”.

2. This GCC is applicable to Civil and Electrical works.

3. All blanks are confined to Contract Data. The blanks provided therein shall be filled up carefully for each tender as applicable.

4. Authority approving the Notice Inviting Tenders (NIT) shall fill up all the blanks in Contract Data before issue of tender document.

5. Additional clauses or modifications to the clauses in the GCC, as applicable specifically to the work shall be incorporated under Special Conditions of Contract.

*****

GENERAL CONDITIONS OF CONTRACT

A. General

1 Definitions

Terms which are defined in the Contract Data are not also defined in the Conditions of Contract but keep their defined meanings. Capital initials are used to identify defined terms.

Bill of Quantities means the priced and completed Bill of Quantities forming part of the Bid.

Compensation Events are those defined in Clause 44

The **Completion Date** is the date of completion of the Works as certified by the Engineer or his nominee in accordance with Sub Clause 56.1

The **Contract** is the contract between the Employer and the Contractor to execute, complete and maintain the Works. It consists of the documents listed in Clause 2.3 below.

The **Contract Data** defines the documents and other information which comprise the Contract

The **Contractor** is a person or corporate body whose Bid to carry out the Works has been accepted by the Employer.

The **Contractor's Bid** is the completed Bidding documents submitted by the Contractor to the Employer.

The **Contract Price** is the price stated in the letter of acceptance and thereafter as adjusted in accordance with the provisions of the Contract.

Days are calendar days, **months** are calendar months.

A **Defect** is any part of the Works not completed in accordance with the Contract.

The **Defects Liability Period** is the period named in the Contract Data and calculated from the Completion Date.

The **Employer** is the party who will employ the Contractor to carry out the Works.

Equipment is the Contractor's machinery and vehicles brought temporarily to the Site to construct the Works.

The **Initial Contract Price** is the Contract Price listed in the Employer's Letter of Acceptance.

The **Intended Completion Date** is the date on which it is intended that the Contractor shall complete the works. The Intended Completion Date is specified in the Contract Data. The Intended Completion Date may be revised only by the Engineer or his nominee by issuing an extension of time.

Market Rate is the rate as decided by the Engineer on the basis of the cost of materials and labour at the site where the work is to be executed plus 10% to cover all overheads and profits.

Materials are all supplies, including consumables, used by the Contractor for incorporation in the Works.

The **Engineer or his nominee** is the person named in the Contract Data (or any other competent person appointed and notified to the Contractor to act in replacement of the Engineer or his nominee) who is responsible for supervising the Contractor, administering the Contract, certifying payments due to the Contractor, issuing and valuing Variations to the Contract, awarding extensions of time and valuing the Compensation Events.

Plant is any integral part of the Works which is to have mechanical, electrical, electronic or chemical or biological function.

Ruling Percentage is the percentage by which the tendered amount of the works actually awarded is higher or lower than the corresponding estimated amount of the works actually awarded.

The **Site** is the area defined as such in the Contract Data.

Site Investigation Reports are those which were included in the Bidding documents and are factual interpretative reports about the surface and sub-surface conditions at the site.

Specification means the Specification of the Works included in the Contract and any modification or addition made or approved by the Engineer or his nominee.

The **Start Date** is given in the Contract Data. It is the date when the Contractor

shall commence execution of the works. It does not necessarily coincide with any of the Site Possession Date.

A **Sub Contractor** is a person or corporate body who has a Contract with the Contractor to carry out a part of the work in the Contract which includes work on the Site.

Temporary Works are works designed, constructed, installed and removed by the Contractor which are needed for construction or installation of the Works

A **Variation** is an instruction given by the Engineer or his nominee which varies the Original Works.

The **Works** are what the Contract requires the Contractor to construct, install and turn over to the Employer as defined in the Contract Data.

2 Interpretation

2.1 In interpreting these Conditions of Contract, singular also means plural, male also means female or neuter and the other way around. Headings have no significance. Words have their normal meaning under the language of the Contract unless specifically defined. The Engineer or his nominee will provide instructions clarifying queries about the Conditions of Contract.

2.2 If sectional completion is specified in the Contract Data, references in the Conditions of Contract to the Works, the Completion Date, and the Intended Completion Date apply to any Section of the Works (other than references to the Completion Date and Intended Completion date for the whole of the Works).

2.3 The documents forming the Contract shall be interpreted in the following order of priority:

(1) Agreement
(2) Letter of Acceptance and notice to proceed with works
(3) Contractor's Bid
(4) Contract Data
(5) Conditions of Contract including Special Conditions of Contract
(6) Specifications
(7) Drawings
(8) Bill of quantities and
(9) Any other documents listed in the Contract Data as forming part of the Contract.

3 Language and Law

3.1 The language of the Contract and the law governing the Contract are stated in the Contract Data.

4 Engineer or his nominee's Decisions

4.1 Except where otherwise specifically stated, the Engineer or his nominee will decide contractual matters between the Employer and the Contractor in the role representing the Employer.

5 Delegation

5.1 The Engineer or his nominee may delegate any of the duties and responsibilities to other people after notifying the Contractor and may cancel any delegation after notifying the Contractor.

6 Communications

6.1 Communications between parties which are referred to in the conditions are effective only when in writing. A notice shall be effective only when it is delivered (in terms of Indian Contract Act 1872).

7 Contract Agreement

7.1 A suitable form is annexed as "FORM OF AGREEMENT" to the Tender Document. Upon signing the Contract Agreement, the Contractor shall make copies of Contract Documents, as indicated in the Contract Data, in hardbound cover which shall cover documents used in Contract/Agreement and provide the same to the Employer at no extra cost.

7.2 Data made available by the Employer in accordance with provisions of the Condition of Contract shall be deemed to include data listed elsewhere in the Contract and open for inspection at the office of the Engineer as indicated in the Contract data of the Cochin Port Authority (by prior appointment with the Engineer).

8 Subcontracting

8.1 The Contractor may subcontract with the approval of the Engineer or his nominee but may not assign the Contract without the approval of the Employer in writing. Subcontracting does not alter the Contractor's obligations.

Notwithstanding any subcontracting with such approval as required under above and notwithstanding that the Engineer shall have received copies of any sub-contract, the Contractor shall be solely responsible for the quality and proper execution of the works, performance of all conditions of contract in all respects as if such subletting had not taken place and as if such work has been done directly by the Contractor.

If any Sub-Contractor engaged upon the works at the site executes any work, which in the opinion of the Engineer or his nominee is not in accordance with the Contract condition, written notice may be given to the Contractor requesting him to terminate such sub contract and the Contractor**,** upon receipt of such notice shall terminate such sub contract and the said Sub Contractor shall forthwith leave the works, failing which the Employer shall have right to remove such Sub Contractors from site. No action taken by the Employer under this clause shall relieve the Contractor of any of his liabilities under the contract or give rise to any compensation, extension of time or otherwise.

8.2 **Other Contractors**

The Contractor shall co-operate and share the site with other Contractors, public authorities, utilities and the Employer between the dates given in the Schedule of other Contractors. The Contractor shall as referred to in the Contract Data, also provide facilities and services for them as described in the Schedule. The Employer may modify the schedule of other Contractors and shall notify the Contractor of any such modification.

9 Personnel

9.1 The Contractor shall employ the key personnel named in the Schedule of Key Personnel as referred to in the Contract Data to carry out the functions stated in the Schedule or other personnel approved by the Engineer or his nominee. The Engineer or his nominee will approve any proposed replacement of key personnel only if their qualifications, abilities, and relevant experience are substantially equal to or better than those of the personnel listed in the schedule.

9.2 If the Engineer or his nominee asks the Contractor to remove a person who is a member of the Contractor’s staff of from his work force stating the reasons, the Contractor shall ensure that the person leaves the site within seven days and has no further connections with the work in the contract.

10 Employer’s and Contractor’s Risks

10.1 The Employer carries the risks which this Contract states are Employer’s risks

and the Contractor carries the risks which this Contract states are Contractor's risks.

11 Employer's Risks

11.1 The Employers risks are

(a) Loss or damage due to the use or occupation by the Employer of any Section or part of the Permanent Works, except as may be provided for in the Contract;

(b) Loss or damage to the extent that it is due to the design of the Works, other than any part of the design provided by the Contractor or for which the Contractor is responsible; and

(c) Any operation of the forces of nature (in so far as it occurs on the Site) which an experienced Contractor:

i) could not have reasonably foreseen, or

ii) could reasonably have foreseen, but against which he could not reasonably have taken at least one of the following measures:

a) prevent loss or damage to physical property from occurring by taking appropriate measures, or

b) insure against.

12 Contractor's Risk

12.1 All risks of loss of or damage to physical property and of personal injury and death which arise during and in consequence of the performance of the Contract other than the excepted risks are the responsibility of the Contractor.

12.2 All risks of loss of or damage to physical property and of personal injury and death which arise during and in consequence of the performance of the Contract other than the excepted risks are the responsibility of the Contractor.

12.3 Excepted risks are riot (in so far as it is uninsurable) war, invasion, act of foreign enemies, hostilities (whether war be declared or not), civil war, rebellion, revolution, insurrection or military usurped power or a cause solely due to use of occupation by the Employer of any portion of the work, any operation of the forces of nature that the Contractor could not have foreseen or reasonably provided against. (All of such are herein collectively referred to as the excepted risks).

13 Insurance

13.1 The Contractor shall provide in the joint names of the Employer and the Contractor, insurance cover from the Start Date to the end of the Defects

Liability Period, in the amounts and deductibles stated in the Contract Data for the following events which are due to the Contractors risks.

a. loss of or damage to the Works, Plant and Materials
b. loss of or damage to Equipment;
c. loss of or damage of property (except the Works, Plant, Materials and Equipment) in connection with the Contract; and
d. personal injury or death.

13.2 Policies and certificates for insurance shall be delivered by the Contractor to the Engineer or his nominee for approval before the start date. All such insurances shall provide for compensation to be payable in the types and proportions of currencies required to rectify the loss or damage incurred.

13.3 If the Contractor does not provide any of the policies and certificates required, the Employer may effect the insurance which the Contractor should have provided and recover the premiums the Employer has paid from any payments due to the Contractor or, if no payment is due, the payment of the premiums shall be a debt due.

13.4 Alterations to the terms of insurance shall not be made without the approval of the Engineer or his nominee.

13.5 Both parties shall comply with all conditions of the insurance policies.

14 Site Investigation Reports

14.1 The Contractor, in preparing the Bid, shall rely on the Site Investigation Report referred to in the Contract Data, supplemented by any information available to the Bidder.

15 Queries about the Contract Data

15.1 The Engineer or his nominee will clarify queries on the Contract Data.

16 Contractor to Construct the Works

16.1 The Contractor shall construct and install the works in accordance with the Specification and Drawings.

16.2 The Contractor shall execute the whole and every part of the work in the most substantial and workmanlike manner both as regards materials and otherwise in every respect in strict accordance with the Specifications. The Contractor shall also conform exactly, fully and faithfully to the design, drawings and instructions in writing in respect of the work signed by the Engineer or his

nominee and the Contractor shall be furnished free of charge one copy of the contract documents together with specifications, designs, drawings and instructions as are not included in the Specifications specified in Contract Data or in any Bureau of Indian Standard or any other published standard or code or, Schedule of Rates or any other printed publication referred to elsewhere in the Contract.

16.3 The Contractor shall comply with the provisions of the contract and with the care and diligence execute and maintain the works and provide all labour and materials, tools and plants including for measurements and supervision of all works, structural plans and other things of temporary or permanent nature required for such execution and maintenance in so far as the necessity for providing these, is specified or is reasonably inferred from the contract. The Contractor shall take full responsibility for adequacy, suitability and safety of all the works and methods of construction.

17 The Works to be Completed by the Intended Completion Date

17.1 The Contractor may commence execution of the works on the Start Date and shall carry out the works in accordance with the program submitted by the Contractor as updated with the approval of the Engineer or his nominee, and complete them by the Intended Completion Date.

18 Approval by the Engineer or his nominee

18.1 The Contractor shall submit Specifications and Drawings showing the proposed Temporary Works or Permanent Works, in the case of Contractor's design to the Engineer or his nominee, who is to approve them if they comply with the specifications and Drawings.

18.2 The Contractor shall be responsible for design of Temporary Works.

18.3 The Engineer or his nominee's Approval shall not alter the Contractor's responsibility for design of the Temporary Works.

18.4 All Drawings prepared by the Contractor for the execution of the temporary works, are subject to prior approval by the Engineer or his nominee before their use.

19 Safety

19.1 The Contractor shall be responsible for the safety of all activities on the Site.

20 Discoveries

20.1 Anything of historical or other interest or of significant value unexpectedly discovered on the Site is the property of the Employer. The Contractor is to notify the Engineer or his nominee of such discoveries and carry out the Engineer or his nominee's instructions for dealing with them.

21 Possession of the Site

21.1 The Employer shall give possession of all parts of the Site to the Contractor, free from encumbrances. If possession of a part is not given by the date stated in the Contract Data the Employer is deemed to have delayed the start of the relevant activities and this will be a Compensation Event.

22 Access to the Site

22.1 The Contractor shall allow the Engineer or his nominee and any person authorized by the Engineer or his nominee access to the Site or to any place where work in connection with the Contract is being carried out or is intended to be carried out and to any place where materials or plant are being manufactured, fabricated and /or assembled for the works.

23 Instructions

23.1 The Contractor shall carry out all instructions of the Engineer or his nominee which comply with the applicable laws where the Site is located.

24 Disputes

24.1 If the Contractor believes that a decision taken by the Engineer or his nominee was either outside the authority given to the Engineer or his nominee by the Contract or that the decision was wrongly taken, the decision shall be referred to the Employer within 28 days of the notification of the Engineer or his nominee's decision.

25 Settlement of Disputes & Arbitration

Except where otherwise provided in the contract all questions and disputes relating to the meaning of the specifications, design, drawings and instructions here-in before mentioned and as to the quality of workmanship or materials used on the work or as to any other question, claim, right, matter or thing whatsoever in any way arising out of or relating to the contract, designs, drawings, specifications, estimates, instructions, orders or these conditions or otherwise concerning the works or the execution or failure to execute the same whether arising during the

progress of the work or after the cancellation, termination, completion or abandonment thereof shall be dealt with as mentioned hereinafter:-

i) If the Contractor considers any work demanded of him to be outside the requirements of the contract, or disputes any drawings, record or decision given in writing by the Engineer-in-charge on any matter in connection with or arising out of the contract or carrying out of the work, to be unacceptable, he shall promptly within 15 days request the Engineer in writing for written instruction or decision. Thereupon, the Engineer shall give his written instructions or decision within a period of one month from the receipt of the Contractor's letter.

If the Engineer fails to give his instructions or decision in writing within the aforesaid period or if the Contractor is dissatisfied with the instructions or decision of the Engineer, the Contractor may, within 15 days of the receipt of Engineer's decision, appeal to the Chairman who shall afford an opportunity to the Contractor to be heard, if the latter so desires, and to offer evidence in support of his appeal. The Chairman shall give his decision within 30 days of receipt of Contractor's appeal. If the Contractor is dissatisfied with this decision, the Contractor shall within a period of 30 days from receipt of the decision, give notice to the Chairman for appointment of arbitrator failing which the said decision shall be final, binding and conclusive and not referable to adjudication by the arbitrator.

ii) Except where the decision has become final, binding and conclusive in terms of Sub-Para (i) above disputes or difference shall be referred for adjudication through arbitration by a sole arbitrator appointed by the Employer or his authorized representative. If the arbitrator so appointed is unable or unwilling to act or resigns his appointment or vacates his office due to any reason whatsoever another sole arbitrator shall be appointed in the manner aforesaid. Such person shall be entitled to proceed with the reference from the stage at which it was left by his predecessor.

It is a term of this contract that the party invoking arbitration shall give a list of disputes with amounts claimed in respect of each such dispute along with the notice for appointment of arbitrator and giving reference to the rejection by the Chairman of the appeal.

It is also a term of this contract that no person other than a person appointed by the Employer or his authorized representative as aforesaid should act as arbitrator and if for any reason that is not possible, the matter shall not be referred to arbitration at all.

It is also a term of this contract that if the Contractor does not make any demand for appointment of arbitrator in respect of any claims in writing as aforesaid within 120 days of receiving the intimation from the Engineer that the final bill is ready for payment, the claim of the Contractor shall be deemed to have been waived and

absolutely barred and the Employer or his authorized representative shall be discharged and released of all liabilities under the contract in respect of these claims.

The arbitration shall be conducted in accordance with the provisions of the Arbitration and Conciliation Act, 1996 (26 of 1996) or any statutory modifications or reenactment thereof and the rules made there under and for the time being in force shall apply to the arbitration proceeding under this clause.

It is also a term of this contract that the arbitrator shall adjudicate on only such disputes as are referred to him by the appointing authority and give separate award against each dispute and claim referred to him and, in all cases, where the total amount of the claims by any party exceeds Rs.1,00,000/- the arbitrator shall give reasons for the award.
It is also a term of the contract that if any fees are payable to the arbitrator these shall be paid equally by both the parties.

It is also a term of the contract that the arbitrator shall be deemed to have entered on the reference on the date he issues notice to both the parties calling them to submit their statement of claims and counter statement of claims. The venue of the arbitration shall be at Cochin. The fees, if any, of the arbitrator shall, if required to be paid before the award is made and published, be paid half and half by each of the parties. The cost of the reference and of the award (including the fees, if any, of the arbitrator) shall be in the discretion of the arbitrator who may direct to any party by whom and in what manner, such costs or any part thereof shall be paid and fix or settle the amount of costs to be so paid.

26 Computerized Measurement Book

Engineer or his nominee shall, except as otherwise provided, ascertain and determine by measurement, the value of work done in accordance with the contract.

All measurement of all items having financial value shall be entered by the Contractor and compiled in the shape of the Computerized Measurement Book having pages of A-4size as per the format of the department so that a complete record is obtained of all the items of works performed under the Contract.

All such measurements and levels recorded by the Contractor or his authorized representative from time to time, during the progress of the work, shall be got checked by the Contractor from the Engineer or his authorized representative as per interval or program fixed in consultation with Engineer or his authorized representative. After the necessary corrections made by the

Engineer or his nominee, the measurement sheets shall be returned to the Contractor for incorporating the corrections and for resubmission to the Engineer for the dated signatures by the Engineer or his nominee and the Contractor or their representatives in token of their acceptance.

Whenever bill is due for payment, the Contractor would initially submit draft computerized measurement sheets and these measurements would be got checked/test checked from the Engineer- and/or his authorized representative. The Contractor will, thereafter, incorporate such changes as may be done during these checks/test checks in his draft computerized measurements, and submit to the department a computerized measurement book, duly bound, and with its pages machine numbered. The Engineer and/or his authorized representative would thereafter check this MB, and record the necessary certificates for their checks/test checks.

The final, fair, computerized measurement book given by the Contractor, duly bound, with its pages machine numbered, should be 100% correct, and no cutting or over-writing in the measurements would thereafter be allowed. If at all any error is noticed, the Contractor shall have to submit a fresh computerized MB with its pages duly machine numbered and bound, after getting the earlier MB cancelled by the department. Thereafter, the MB shall be taken in the Divisional Office records, and allotted a number as per the Register of Computerized MBs. This should be done before the corresponding bill is submitted to the Division Office for payment. The Contractor shall submit two spare copies of such computerized MB's for the purpose of reference and record by the various officers of the department.

The Contractor shall also submit to the department separately his computerized Abstract of Cost and the bill based on these measurements, duly bound, and its pages machine numbered along with two spare copies of the bill. Thereafter, this bill will be processed by the Division Office and allotted a number as per the computerized record in the same way as done for the measurement book meant for measurements.

The Contractor shall, without extra charge, provide all assistance with every appliance, labour and other things necessary for measurements and recording levels.

Except where any general or detailed description of the work expressly shows to the contrary, measurements shall be taken in accordance with the procedure set forth in the Specifications notwithstanding any provision in the relevant Standard Method of measurement or any general or local custom. In the case of items which are not covered by specifications, measurements shall be taken in accordance with the relevant standard method of measurement

issued by the Bureau of Indian Standards and if for any item no such standard is available then a mutually agreed method shall be followed.

The Contractor shall give not less than seven days' notice to the Engineer or his authorized representative in charge of the work before covering up or otherwise placing beyond the reach of measurement any work in order that the same may be measured and correct dimensions thereof be taken before the same is covered up or placed beyond the reach of measurement and shall not cover up and place beyond reach of measurement any work without consent in writing of the Engineer or his authorized representative in charge of the work who shall within the aforesaid period of seven days inspect the work, and if any work shall be covered up or placed beyond the reach of measurements without such notice having been given or the Engineer’s consent being obtained in writing the same shall be uncovered at the Contractor's expense, or in default thereof no payment or allowance shall be made for such work or the materials with which the same was executed.

Engineer or his authorized representative may cause either themselves or through another officer of the department to check the measurements recorded jointly or otherwise as aforesaid and all provisions stipulated herein above shall be applicable to such checking of measurements or levels.

It is also a term of this Contract that recording of measurements of any item of work in the measurement book and/or its payment in the interim, on account or final bill shall not be considered as conclusive evidence as to the sufficiency of any work or material to which it relates nor shall it relieve the Contractor from liabilities from any over measurement or defects noticed till completion of the Defects Liability Period.

B. Time Control

27 Program

27.1 Within the time stated in the Contract Data the Contractor shall submit to the Engineer or his nominee for approval a Program showing the general methods, arrangements, order, and timing for all the activities in the works along with monthly cash flow forecast.

27.2 An update of the Program shall be a program showing the actual progress achieved on each activity and the effect of the progress achieved on the timing of the remaining work including any changes to the sequence of the activities.

27.3 The Contractor shall submit to the Engineer on the first day of each week or such longer period as the Engineer may from time to time direct, a progress report in an approved form showing up-to-date total progress, progress

achieved against planned progress, during the previous week and progress forecast for the following week for all important items in each section or portion of the Works, in relation with the approved Program.

27.4 The Contractor shall submit to the Engineer or his nominee, for approval an updated Program at intervals no longer than the period stated in the Contract Data. If the Contractor does not submit an updated Program within this period, the Engineer or his nominee may withhold the amount stated in the Contract Data from the next payment certificate and continue to withhold this amount until the next payment after the date on which the overdue Program has been submitted.

28 Revised Program

28.1 The Engineer or his nominee's approval of the Program shall not alter the Contractor's obligations. The Contractor may revise the Program and submit it to the Engineer or his nominee again at any time for approval. A revised Program is to show the effect of Variations and Compensation Events.

29 Extension of the Intended Completion Date

29.1 The Engineer or his nominee shall extend the Intended Completion Date if a Compensation Event occurs or a Variation is issued which makes it impossible for Completion to be achieved by the Intended Completion Date without the Contractor taking steps to accelerate the remaining work and which would cause the Contractor to incur additional cost.

29.2 The Engineer or his nominee shall decide whether and by how much to extend the Intended Completion Date within 21 days of the Contractor asking the Engineer or his nominee for a decision upon the effect of a Compensation Event or Variation or any other events causing delay, beyond the control of the Contractor and submitting full supporting information. If the Contractor has failed to give early warning of a delay or has failed to cooperate in dealing with a delay, the delay by this failure shall not be considered in assessing the new Intended Completion Date.

29.3 Such Request for extension of time, to be eligible for consideration, shall be made by Contractor in writing within fourteen days of the happening of the event causing delay on the prescribed form. The Contractor may also, if practicable, indicate in such a request the period for which extension is desired.

30 Delays Ordered by the Engineer or his nominee

30.1 The Engineer or his nominee may instruct the Contractor to delay the start or progress of any activity within the Works.

31 Management Meetings

31.1 Either the Engineer or his nominee or the Contractor may require the other to attend a management meeting. The business of a management meeting shall be to review the plans for remaining work and to deal with matters raised in accordance with the early warning procedure.

31.2 The Engineer or his nominee shall record the business of management meetings and is to provide copies of his record to those attending the meeting and to the Employer. The responsibility of the parties for actions to be taken is to be decided by the Engineer or his nominee either at the management meeting or after the management meeting and stated in writing to all who attended the meeting.

32 Early Warning

32.1 The Contractor is to warn the Engineer or his nominee at the earliest opportunity of specific likely future events or circumstances that may adversely affect the quality of the work, increase the Contract Price or delay the execution of works. The Engineer or his nominee may require the Contractor to provide an estimate of the expected effect of the event or circumstance on the Contract Price and Completion Date. The estimate is to be provided by the Contractor as soon as reasonably possible.

32.2 The Contractor shall cooperate with the Engineer or his nominee in making and considering proposals for how the effect of such an event or circumstance can be avoided or reduced by anyone involved in the work and in carrying out any resulting instruction of the Engineer or his nominee.

32.3 The Contractor shall immediately give notice in writing to the Engineer or his nominee upon happening of any event as detailed below if the work is delayed by:

i) Force majeure, or
ii) Abnormally bad weather, or
iii) Serious loss or damage by fire, or
iv) Civil commotion, local commotion of workmen, strike or lockout, affecting any of the trades employed on the work, or
v) Delay on the part of other Contractors or tradesmen engaged by Engineer in executing work not forming part of the Contract, or
vi) Any other cause which, in the absolute discretion of Engineer, is beyond the Contractor's control.

33 Force Majeure

"Force Majeure" means an exceptional event or circumstance:

a) Which is beyond a Party's control,
b) Which such Party could not reasonably have provided against before entering into the Contract,
c) Which, having arisen, such Party could not reasonably have avoided or overcome, and
d) Which is not substantially attributable to the other Party.

Force Majeure may include, but is not limited to, exceptional events or circumstances of the kind listed below, so long as conditions (a) to (d) above are satisfied:

i) War and hostilities (whether war be declared or not), invasion, act of foreign enemies;
ii) Rebellion, revolution, insurrection, or military or usurped power, or civil war;
iii) Ionozing radiations, or contamination by radioactivity from any nuclear fuel, or from any nuclear waste, from the combustion of nuclear fuel, radioactive toxic explosive or other hazardous properties of any explosive nuclear assembly or nuclear component thereof;
iv) Pressure waves caused by aircraft or other aerial devices travelling at sonic or supersonic speeds; and
v) Riot, commotion or disorder, unless solely restricted to the employees of the Contractor or of his Sub Contractors and arising from the conduct of the Works;
vi) Floods, tornadoes, earthquakes and landslides.

C. Quality Control

34 Identify Defects

34.1 The Engineer or his nominee shall check the Contractor’s work and notify the Contractor of any Defects that are found. Such checking shall not affect the Contractor’s responsibilities. The Engineer or his nominee may instruct the Contractor to search for a Defect and to uncover and test any work that the Engineer or his nominee considers may have a Defect.

35 Tests

35.1 If the Engineer or his nominee instructs the Contractor to carry out a test not specified in the Specification to check whether any work has a Defect and if the test shows that it has defect, the Contractor shall pay for the test and any samples. If there is no Defect the test shall be a Compensation Event.

36 Defect Liability

36.1 The Engineer or his nominee shall give notice to the Contractor of any Defects before the end of the Defects Liability Period, which begins at Completion and is defined in the Contract Data. The Defects Liability Period shall be extended for as long as Defects remain to be corrected.

36.2 Every time notice of a Defect is given, the Contractor shall correct the notified defect within the length of time specified by the Engineer or his nominee's notice. To the intent that the works shall, at or as soon as practicable after the expiration of the Defects Liability Period, be delivered to the Employer in the condition required by the Contract, fair wear and tear excepted, to the satisfaction of the Engineer, the Contractor shall :

(a) Complete the work, if any, outstanding on the date stated in the Taking-Over Certificate within the date to be intimated by the Engineer and

(b) Execute all such work of amendment, reconstruction, and remedying defects, shrinkages or other faults as the Engineer may, during the Defects Liability Period or within 14 days after its expiration, as a result of an inspection made by or on behalf of the Engineer prior to its expiration, instruct the Contractor to execute.

36.3 Cost of Remedying Defects

All work referred to in Sub Clause 36.2 shall be executed by the Contractor at his own cost if the necessity thereof is, in the opinion of the Engineer, due to:

(a) The use of materials, Plant or workmanship not in accordance with the Contract, or

(b) Where the Contractor is responsible for the design of part of the Permanent Works, any fault in such design, or the neglect or failure on the part of the Contractor to comply with any obligation, expressed or implied, on the Contractor's part under the Contract.

36.4 Defects Liability Certificate

The Contract shall not be considered as completed until a Defects Liability Certificate shall have been signed by the Engineer and delivered to the Employer, with a copy to the Contractor, stating the date on which the Contractor shall have completed his obligations to execute and complete the Works and remedy any defects therein to the Engineer's satisfaction. The Defects Liability Certificate shall be given by the Engineer within 28 days after the expiration of the Defects Liability Period, or, if different defects liability periods shall become applicable to different Sections or parts of the Permanent

Works, the expiration of the latest such period, or as soon thereafter as any works instructed, pursuant to Clauses 36, have been completed to the satisfaction of the Engineer.

36.5 **Unfulfilled Obligations**

Notwithstanding the issue of the Defects Liability Certificate the Contractor and the Employer shall remain liable for the fulfillment of any obligation incurred under the provisions of the Contract prior to the issue of the Defects Liability Certificate which remains unperformed at the time such Defects Liability Certificate is issued and, for the purposes of determining the nature and extent of any such obligation, the Contract shall be deemed to remain in force between the parties to the Contract.

36.6 **Uncorrected Defects.**

If the Contractor has not corrected a Defect within the time specified in the Engineer's or his nominee's notice the Engineer or his nominee will assess the cost of having the Defect corrected, and the Contractor will pay this amount.

D. Cost Control

37 Bill of Quantities

37.1 The Bill of Quantities shall contain items for the construction, supply, installation, testing and commissioning work to be done by the Contractor.

37.2 The Bill of Quantities is used to calculate the Contract Price. The Contractor is paid for the quantity of the work done at the rate in the Bill of Quantities for each item.

38 Changes in the Quantities

38.1 If the final quantity of the work done differs from the quantity in the Bill of Quantities for the particular item by more than 25 % provided the change exceeds (+) 10% of initial Contract Price, the Engineer or his nominee shall adjust the rate(s), to allow for the change.

38.2 The Engineer or his nominee shall not adjust rates for changes in quantities if thereby the Initial Contract Price is exceeded by more than 10% except with the prior approval of the Employer.

38.3 If requested by the Engineer or his nominee where the quoted rate (s) of any item(s) is abnormally high, the Contractor shall provide the Engineer or his

nominee with a detailed cost breakdown of such rate in the Bill of Quantities.

39 Variations

39.1 The Engineer shall make any Variation of the form, quality or quantity of the Works or any part thereof that may, in his opinion, be necessary and for that purpose, or if for any other reason it shall, in his opinion, be appropriate, he shall have the authority to instruct the Contractor to do and the Contractor shall do any of the following:

(a) increase or decrease the quantity of any work included in the Contract,

(b) omit any such work,

(c) change the character or quality or kind of any such work,

(d) change the levels, lines, position and dimension of any part of the Works,

(e) execute additional work of any kind necessary for the completion of the Works,

(f) change any specified sequence or timing of construction of any part of the Works.

No such Variation shall in any way vitiate or invalidate the Contract, by the effect, if any, of all such Variations shall be valued in accordance with Clause 40. Provided that where the issue of an instruction to vary the works is necessitated by some default of or breach of contract by the Contractor or for which he is responsible, any additional cost attributable to such default shall be borne by the Contractor. All Variations shall be included in updated Programs produced by the Contractor.

39.2 Instructions for Variations

The Contractor shall not make any such Variation without an instruction of the Engineer. Provided that no instruction shall be required for increase or decrease in the quantity of any work where such increase or decrease is not the result of an instruction given under this clause, but is the result of the quantities exceeding or being less than those stated in the Bill of Quantities.

40 Payment for Variations

40.1 Variation permitted shall not exceed (+) 25% in quantity of each individual item, and (+) 10% of the total contract price. Within 14 days of the date of instruction for executing varied work, extra work or substitution, and before the commencement of such work, notice shall be given either (a) by the Contractor to the Employer of his intention to claim extra payment or a varied rate or price, or (b) by the Employer to the Contractor of his intention to vary rate or price.

40.2 For items not existing in the Bill of Quantities or substitution to items in the Bill of Quantities, rate payable should be determined by methods given below and in the order given below:

i) Rates and prices derived from the rate of similar items in Contract.
ii) Rates and prices in the Schedule of Rates applicable to the Contract plus Ruling percentage.
iii) Market rates of materials and labour, hire charges of plant and machinery used, plus 10% for overheads and profits of Contractor.

40.3 For items in the Bill of Quantities but where quantities have increased beyond the variation limits, the rate payable for quantity in excess of the quantity in the Bill of Quantity plus the permissible variation shall be as determined by methods given below:

i) Rates and prices in the Schedule of Rates applicable to the Contract plus Ruling percentage.
ii) Market rates of material and labour, hire charges of plant and machinery used plus 10% for overheads and profits of Contractor.
whichever is lower, but not less than the rate in the Bill of Quantities.

40.4 If there is delay in the Employer and the Contractor coming to an agreement on the rate of an extra item, rates as proposed by the Employer shall be payable provisionally till such time as the rates are finally determined or till date mutually agreed.

40.5 If the Engineer or his nominee decides that the urgency of varying the work prevent a quotation being given and considers not delaying the work, no quotation shall be given and the Variation shall be treated as a Compensation Event.

41 Cash flow forecasts

41.1 When the Program is updated, the Contractor is to provide the Engineer or his nominee with an updated cash flow forecast.

42 Payment Certificates

42.1 The Contractor shall submit to the Engineer or his nominee monthly statements of the estimated value of the work completed less the cumulative amount certified previously.

42.2 The Engineer or his nominee shall check the Contractors' monthly statement within 14 days and certify the amount to be paid to the Contractor after taking into account any credit or debit for the month in question in respect of materials for the works in the relevant amounts and under conditions set forth

in sub-clause 51.6 of the Contract Data (Secured Advance).

42.3 The value of work executed shall be determined by the Engineer or his nominee.

42.4 The value of work executed shall comprise the value of the quantities of the items in the Bill of quantities completed.

42.5 The value of work executed shall include the valuation of variations and Compensation Events.

42.6 The Engineer or his nominee may exclude any item certified in a previous certificate or reduce the proportion of any item previously certified in any certificate in the light of later information.

43 Payments

43.1 Bills shall be prepared and submitted by the Contractor. Joint measurements shall be taken continuously and need not be connected with billing stage. System of 4 copies of measurements, one each for Contractor, Employer and Engineer or his nominee, and signed by both Contractor and Engineer or his nominee shall be followed.

43.2 Payment of Bills for civil works shall be regulated as detailed hereunder:

43.2.1 Interim Bills shall be paid within 21 days of date of submission of bills in full shape by the Contractor. 75% of the bill amount shall be paid within 7 days of submission of the bill, if on request by the Contractor. Balance amount of the verified bill shall be paid within 21 days of the submission of the bill.

43.2.2 Final Bill shall be paid within 3 months as detailed below on issue of Taking over Certificate by the Engineer or his nominee. The Contractor shall submit final Bill within 30 days of issue of Taking over Certificate. Engineer or his nominee shall check the bill within 30 days after its receipt and return the bill to Contractor for corrections, if any. The Contractor should re-submit the bill with corrections within 15 days of its return by the Engineer or his nominee. The re-submitted bill shall be checked and paid within 30 days of its receipt.

43.3 Payment for Electrical works shall be regulated as detailed below:

43.3.1 The Contractor shall be entitled upon certificates of the Engineer or his nominee to payments in accordance with the following provisions:

1) **For supply portion:** 75% of the value, as certified by the Engineer or his nominee, of the materials from time to time delivered on the

site.Balance25% after completing the work in all respects, commissioning and handing over the installation to the Employer to the satisfaction of the Engineer and his nominee and his certification.

2) For erection portion :

i) 85% of the value as certified by the Engineer or his nominee, of the installation portion on completion of the erection work under contract, for which payments are claimed.

ii) Balance 15% along with other payments if any, after completing the work in all respects, commissioning and taking over the installation by the Employer to the satisfaction of the Engineer and his nominee and his certification.

43.3.2 For HT works, the work shall not be considered as completed until the installation is energized after obtaining approval certificate from Central Electrical Authority (CEA) and upon the issuance of taking over certificate by Engineer or his nominee. The final payment shall be made only after taking over the installation by the Employer.

43.4 All the interim payments shall be regarded as payment by way of advances against final payment only and shall not preclude the requiring of bad, unsound and imperfect or unskilled work to be rejected, removed, taken away and reconstructed or re-erected. Any certificate given by the Engineer or his nominee relating to the work done or materials delivered forming part of such payment, may be modified or corrected by any subsequent such certificate(s) or by the final certificate and shall not by itself be conclusive evidence that any work or materials to which it relates is/are in accordance with the contract and specifications. Any such interim payment, or any part thereof shall not in any respect conclude, determine or affect in any way powers of the Engineer- or his nominee-charge under the contract or any of such payments be treated as final settlement and adjustment of accounts or in any way vary or affect the contract.

43.5 Pending consideration of extension of date of completion interim payments shall continue to be made as herein provided, without prejudice to the right of the department to take action under the terms of this contract for delay in the completion of work, if the extension of date of completion is not granted by the competent authority.

43.6 No further claims shall be made by the Contractor after submission of the final bill and these shall be deemed to have been waived and extinguished.

43.7 If an amount certified is increased in a later certificate as a result of an award by the Arbitrator, the Contractor shall be paid interest upon the delayed

payment as set out in the award. Interest shall be calculated from the date upon which the increased amount would have been certified in the absence of dispute.

43.8 Items of the Works for which no rate or price has been entered in will not be paid for by the Employer and shall be deemed covered by other rates and prices in the Contract.

43.9 All payments to the Contractor under the contract shall unless otherwise stated elsewhere be made to the Contractor in Indian currency through e- payments through designated Bank.

44 Compensation Events

44.1 The following mutually agreed Compensation Events unless they are caused by the Contractor would be applicable:

(a) The Employer does not give access to a part of the Site by the Site Possession Date stated in the Contract Data.
(b) The Employer modifies the schedule of other Contractors in a way which affects the work of the Contractor under the contract.
(c) The Engineer or his nominee orders a delay or does not issue drawings, specifications or instructions required for execution of works on time.
(d) The Engineer or his nominee instructs the Contractor to uncover or to carry out additional tests upon work which is then found to have no Defects.
(e) Ground conditions are substantially more adverse than could reasonably have been assumed before issuance of Letter of Acceptance from the information issued to Bidders (including the Site Investigation Reports), from information available publicly and from a visual inspection of the site.
(f) The Engineer or his nominee gives an instruction for dealing with an unforeseen condition, caused by the Employer, or additional work required for safety.
(g) Other Contractors, public authorities, utilities or the Employer does not work within the dates and other constraints stated in the Contract that cause delay or extra cost to the Contractor.
(h) The effect on the Contractor of any of the Employer's Risks.
(i) Any other Compensation Events listed in the Contract Data or mentioned in the contract.

Whenever any compensation event occurs, the Contractor will notify the Employer, within 14 days and provide a forecast cost of the compensation event.

44.2 If a Compensation Event would cause additional cost or would prevent the work being completed in the Intended Completion Date, the Contract Price shall be increased and/or the Intended Completion Date shall be extended.

The Engineer or his nominee shall decide whether and by how much the Contract Price shall be increased and whether and by how much the Intended Completion Date shall be extended.

44.3 As soon as information demonstrating the effect of each Compensation Event upon the Contractor's forecast has been provided by the Contractor, it is to be assessed by the Engineer or his nominee and the Contract Price shall be adjusted accordingly. If the Contractor's forecast is deemed unreasonable the Engineer or his nominee shall adjust the Contract Price based on Engineer or his nominee's own forecast. The Engineer or his nominee will assume that the Contractor will react competently and promptly to the event.

45 Rates for items to be inclusive of Taxes

45.1 The rates quoted by the Contractor shall be deemed to be inclusive of the sales tax and other taxes, but excluding service tax that the Contractor will have to pay for the performance of this Contract. The Employer will perform such duties in regard to the deduction of such taxes at sources as per applicable law. Any new Taxes, levies, duties imposed after signing the Contract shall be reimbursed by the Employer on production of documentary evidence.

Service Tax shall be claimed by the Contractor in the invoice except for those services which are covered under Negative list of Services under section 66D of the Finance Act and Mega Exemption Notification No 25/2012-ST dated 20.06.2012.The rate of Service Tax shall be as per the provisions of Point of Taxation Rules, 2011 and value on which service tax to be applied shall be as per the provisions of Service Tax (Determination of Valuation Rules), 2006. Where the contractor is an individual, HUF, Partnership firm or Association of Person, Service Tax shall be claimed under Reverse Charge Mechanism.

46 Currencies

46.1 All payments shall be made in Indian Rupees unless specifically mentioned.

47 Price Adjustment.

47.1 No price adjustment shall be made for works except for the provisions under clause 47.1.A herein under and clause 47.2 for any subsequent change in legislation.

47.1.A For Civil contract works, with intended completion period of the contract more than 12 months, Price adjustment shall be made for the variation in price of materials such as cement, reinforcement steel and structural steel. Compensation for variation in cost of the materials shall be regulated as

described below subject to the condition that such compensation for variation in prices shall be only for the work done during the stipulated period of the contract including such period for which the validity of the contract is extended. The rates quoted for the items in the Schedule of Quantities shall be based on the Base rates of the materials provided in the Contract Data and these base rates are applicable at the Supplier's local delivery point and shall not include cost of loading to Contractor's vehicle, transporting to work site and unloading and stacking at work site

During execution and actual procurement by the Contractor, increase or decrease in the cost of materials over the Base rate (which results in an increase or decrease of cost to the Contractor in carrying out the works) shall form an addition or reduction as the case may be to or from the contract price and shall be paid to or allowed by the Contractor accordingly, provided that such increase or decrease shall relate only to the quantities of material which the Engineer is satisfied as reasonably required for the works. While considering the reasonable requirement of the materials for the work, allowance towards wastage/unusable cutting bits shall be permitted as provided in the Contract Data. The prices of materials considered for regulating the payment as aforesaid shall be the price charged by the suppliers approved by the Engineer at the supplier's local delivery point and this shall not include the cost of loading to the Contractor's vehicle, transporting to the work site and unloading and stacking at work site

47.2 **Subsequent Legislation**

If, after 28 (Twenty eight) days prior to the last date for submission of tenders for the contract, there occur changes to any National or State Statute, Ordinance or Decree or other Law or any regulation or bye law of any local or other duly constituted authority or introduction of any such state statute, Ordinance, Decree, Law, regulation or bye law which causes additional or reduced cost to the Contractor in execution of the contract, such additional or reduced cost shall, after due consultation with the Employer and the Contractor be determined by the Engineer or his nominee and shall be added to or deducted from the contract price and the Engineer or his nominee shall notify the Contractor accordingly with a copy to the Employer.

48 Retention

48.1 The Employer shall retain from each payment due to the Contractor the proportion stated in the Contract Data until Completion of the whole of the Works.

48.2 For civil works, Retention Money shall be deducted at 5% of the gross amount of the bill from the first Running Account bill onwards till the recovered sum amounts to 5% of the contract value or the value of the work done whichever

is higher. Retention money shall be refunded to the Contractor within 14days from the date of payment of final bill.

48.3 No retention money shall be deducted for Electrical works.

49 Liquidated Damages

49A In case of delay in completion of the contract, liquidated damages (L.D) may be levied at the rate of half per cent (½%) of the contract price per week of delay, subject to a maximum of 10 per cent of the contract price. The amount of Liquidated damages can be adjusted or set-off against any sum payable to the Contractor

.

49A(i) The Employer, if satisfied, that the works can be completed by the Contractor within a reasonable time after the specified time for completion, may allow further extension of time at its discretion with or without the levy of L.D. In the event of extension granted being with L.D, the Employer will be entitled without prejudice to any other right or remedy available in that behalf, to recover from the Contractor as agreed damages equivalent to half per cent (½%) of the contract value of the works for each week or part of the week subject to the ceiling defined in sub-Clause 49 A.

49A(ii)The Employer, if not satisfied that the works can be completed by the Contractor, and in the event of failure on the part of the Contractor to complete work within further extension of time allowed as aforesaid, shall be entitled, without prejudice to any other right, or remedy available in that behalf, to rescind the contract.

49A(iii)The Employer, if not satisfied with the progress of the contract and in the event of failure of the Contractor to recoup the delays in the mutually agreed time frame, shall be entitled to terminate the contract.

49A (iv) In the event of such termination of the contract as described in clauses 49A (ii) or 49A (iii) or both the Employer shall be entitled to recover L.D. upto ten per cent (10%) of the contract value and forfeit the security deposit made by the Contractor besides getting the work completed by other means at the risk and cost of the Contractor.

49B **Reduction of Liquidated Damages**

If, before the Time for Completion of the whole of the Works or, if applicable, any Section, Taking Over Certificate has been issued for any part of the Works or of a Section, the liquidated damages for delay in completion of the remainder of the Works or of that section shall, for any period of delay after the date stated in such Taking Over Certificate, and in the absence of alternative provisions in

the Contract, be reduced in the proportion which the value of the part so certified bears to the value of the whole of the Works or Section, as applicable. The provisions of this Sub-Clause shall only apply to the rate of liquidated damages and shall not affect the limit thereof.

50 Nominated Sub Contractors

50.1 All specialists, merchants, tradesmen and others executing any work or supplying any good, materials, Plant or services for which provisional Sums are included in the Contract, who may have been or be nominated or selected or approved by the Employer or the Engineer, and all persons to whom by virtue of the provisions of the Contract, the Contractor is required to subcontract shall, in the execution of such work or the supply of such goods, materials, Plant or services, be deemed to be Sub Contractors to the Contractor and are referred to in this Contract as “Nominated Sub Contractors”.

51 Advance payment

The Employer shall make the following advance payments (as admissible in the contract data) if requested by the Contractor in writing:

Mobilization Advance shall be paid upto 5% of Contract price, payable in two equal instalments. The first instalment shall be paid after mobilization has started and next instalment shall be paid after satisfactory utilization of earlier advance for which, the Contractor shall furnish proof of the satisfactory utilization of the amount.

51.1 Construction/ installation equipment Advance shall be paid upto 5% of Contract price, limited to 90% of assessed cost of machinery. Equipment advance will be paid in two or more instalments. First instalment shall be paid after Construction Equipment has arrived at the site and next instalment shall be paid after satisfactory utilization of earlier advance (s).

51.2 Mobilization Advance and Construction Equipment Advance shall be paid at 14% interest rate and against Bank Guarantee for Mobilization Advance and against hypothecation of Construction Equipment to the Employer.

51.3 Recovery of Mobilization and Construction Equipment advance will start when 15% of the work is executed and recovery of total advance should be completed by the time 80% of the original Contract work is executed.

51.4 The above advance payments shall be admissible only for the works where estimated cost put to tender is more than Rs. 5.0 crores.

51.5 **Secured Advance**

The Engineer or his nominee shall make advance payment in respect of materials and plant brought to site but not yet incorporated and installed in the Works in accordance with conditions stipulated in the Contract Data.

75% of cost of materials and plant brought to site for incorporation into the works only shall be paid as Secured Advance. Materials which are of perishable nature should be adequately insured.

The Contractor, on signing an indenture in the form to be specified by the Engineer, shall be entitled to be paid during the progress of the execution of the work upto 75% of the assessed value of any materials which are in the opinion of the Engineer non-perishable, non-fragile and non-combustible and are in accordance with the contract and which have been brought on the site in connection therewith and are adequately stored and/or protected against damage by weather or other causes but which have not at the time of advance been incorporated in the works. When materials on account of which an advance has been made under this sub-clause are incorporated in the work the amount of such advance shall be recovered/deducted from the next payment made under any of the clause or clauses of this contract.

Such secured advance shall also be payable on other items of perishable nature, fragile and combustible with the approval of the Engineer provided the Contractor provides a comprehensive insurance cover for the full cost of such materials. The decision of the Engineer shall be final and binding on the Contractor in this matter. No secured advance, shall however, be paid on high-risk materials such as ordinary glass, sand, petrol, diesel etc.

52 Securities

52.1 Security Deposit (SD) shall be at 10% of the contract value or value of the work done whichever is higher and it shall consist of two parts:

a) Performance Security to be submitted at award of the work
b) Retention Money to be recovered from Running Bills as detailed in Clause 48 above.

The total amount thus deposited towards SD will be retained as security for the due and proper fulfilment of the contract and will not carry any interest. Such deposit shall be forfeited on failure to perform or non-fulfilment by the Contractor of the terms and conditions of the contract.

52.2 **Performance Security** shall be as below:

a) For civil works : 5% of the Contract value

52.3 The Performance Security shall be provided by the Contractor to the Employer not later than 21 days for domestic bids and 28 days for international bids from the date of letter of acceptance and shall be furnished in one of the following forms:

i) Banker's Cheque/Demand Draft/Pay Order of a Scheduled Bank.
ii) An irrevocable Bank Guarantee (BG) enforceable and encashable at Cochin, drawn from any scheduled bank operating in India as per the proforma.

52.4 The BG furnished towards the Performance Security shall be valid for a period until a date 30days from the day of expiry of the defect liability period stipulated as per the terms of the contract.

52.5 Unless performance Security is furnished within the period as specified in clause 52.3 above or such extension of that period as may be permitted by the Engineer in writing, the Earnest Money will be liable to forfeiture and the contract to cancellation.

52.6 Performance Security will be released / refunded to the Contractor not later than 30 days from the date of completion of Defect Liability / warranty period of the work.

53 Removal of Craft or Plant which has sunk

The Contractor shall forthwith and with dispatch at his own cost raise and remove any craft or plant (floating or otherwise) belonging to him or to any sub-Contractor employed by him (including also any plant which is held by the Contractor or any sub-Contractor under agreement for hire or hire-purchase) which may be sunk in the course of the construction completion or maintenance of the Works or otherwise deal with the same as the Engineer may direct or until the same shall be raised and removed, the Contractor shall set all such buoys and display at night such lights and do all such things for the safety of navigation as may be required by the Engineer or by Employer. In the event of the Contractor not carrying out his obligation imposed upon him by this clause the Employer may provide buoy and light such sunken craft or plant and raise and remove the same (without prejudice to the right of the Employer to hold the Contractor liable under General Conditions) and the Contractor shall refund to the Employer all costs incurred in connection therewith.

54 Contractor's Temporary Moorings

Should the Contractor need, in connection with implementing the Works, to

provide temporary moorings for his craft he may be allowed to do so in location and manner approved by the Engineer subject to all necessary permissions being first obtained by the Contractor from the authorities concerned. The Contractor shall not lay his temporary moorings such as to interfere with the port traffic and such moorings shall be removed if and when required by the Employer.

55 Cost of Repairs

55.1 Loss or damage to the Works or Materials to be incorporated in the Works between the Start Date and the end of the Defects Liability period shall be remedied by the Contractor at the Contractor's cost if the loss or damage arises from the Contractor's acts or omissions.

E. Finishing the Contract

56 Completion

56.1 After completion of the work, the Contractor will serve a written notice to the Engineer or his nominee/Employer to this effect. The Engineer or his nominee/Employer upon receipt of this notice shall conduct a complete joint survey of the work within 7 days and prepare a defects list jointly. The defects pointed out by the Engineer or his nominee/ Employer would be rectified by the Contractor within 14 days and thereafter acceptance report be signed jointly by the Contractor and the Employer. This joint acceptance report shall be treated as 'Completion Certificate'.

56.2 Substantial Completion of Parts

If any part of the Permanent Works has been substantially completed and satisfactorily passed any Tests on Completion prescribed by the Contract, the Engineer may issue a Taking-Over Certificate in respect of that part of the Permanent works before completion of the whole of the Works and, upon the issue of such Certificate, the Contractor shall be deemed to have undertaken to complete with due expedition any outstanding work in that part of the Permanent Works during the Defects Liability Period.

56.3 Surfaces Requiring Reinstatement

Provided that a Taking Over Certificate given in respect of any Section or part of the Permanent Works before completion of the whole of the Works shall not be deemed to certify completion of any ground or surfaces requiring reinstatement, unless such Taking Over Certificate shall expressly so state.

57 Taking Over

57.1 The Engineer or his nominee shall take over the Site and the Works within seven days of the Engineer or his nominee issuing a certificate of Completion.

57.2 Taking Over Certificate

When the whole of the Works have been substantially completed and have satisfactorily passed any Tests on Completion prescribed by the Contract, the Contractor may give a notice to that effect to the Engineer, with a copy to the Employer, accompanied by a written undertaking to finish with due expedition any outstanding work during the Defects Liability Period. Such notice and undertaking shall be deemed to be a request by the Contractor for the Engineer or his nominee to issue a Taking- over Certificate in respect of the Works. The Engineer or his nominee shall, within 21 days of the date of delivery of such notice, either issue to the Contractor, with a copy to the Employer, a Taking-Over Certificate, stating the date on which, in his opinion, the Works were substantially completed in accordance with the Contract, or give instruction in writing to the Contractor specifying all the work which in the Engineer's opinion, is required to be done by the Contractor before the issue of such Certificate. The Engineer or his nominee shall also notify the Contractor of any defects in the Works affecting substantial completion that may appear after such instructions and before completion of the Works specified therein. The Contractor shall be entitled to receive such Taking over Certificate within 21 days of completion, to the satisfaction of the Engineer or his nominee, of the Works so specified and remedying any defects so notified.

57.3 Taking Over of Sections or Parts

Similarly, in accordance with the procedure set out in above Clause 55, the Contractor may request and the Engineer or his nominee shall issue a Taking over Certificate in respect of:

(a) Any Section in respect of which a separate Time for Completion is provided in the Contract Data, or

(b) Any substantial part of the Permanent Works which has been both completed to the satisfaction of the Engineer and, otherwise than as provided for in the Contract, occupied or used by the Employer, or

(c) Any part of the Permanent Works which the Employer has elected to occupy or use prior to completion (where such prior occupation or use is not provided for in the Contract or has not been agreed by the Contractor as a temporary measure).

58 Final Account

58.1 The Contractor shall supply to the Engineer or his nominee a detailed account of the total amount that the Contractor considers payable under the Contract within 30 days of issue of Taking Over Certificate and the Engineer or his nominee shall certify any final payment that is due to the Contractor within 60 days of receiving the Contractor's account if it is correct and complete. If it is not, the Engineer or his nominee shall issue within 30 days a schedule that states the scope of the corrections or additions that are necessary for the correction. If the Final Account is still unsatisfactory after it has been resubmitted the Engineer or his nominee shall decide on the amount payable to the Contractor and issue a payment certificate, within 60 days of receiving the Contractor's revised account.

59 Submission of 'As built Drawings'

59.1 "As built" Drawings are required to be submitted by the Contractor by the dates stated in the Contract Data. If the Contractor does not supply the Drawings and/or manuals by the dates stated in the Contract Data, or they do not receive the Engineer or his nominee's approval, the Engineer or his nominee shall withhold the amount stated in the Contract Data from payments due to the Contractor.

60 Termination

60.1 The Employer or the Contractor may terminate the Contract if the other party causes a fundamental breach of the Contract.

60.2 Fundamental breaches of Contract include, but shall not be limited to the following:

(a) The Contractor stops work for 28 days when no stoppage of work is shown on the current Program and the stoppage has not been authorized by the Engineer or his nominee:
(b) The Engineer or his nominee instructs the Contractor to delay the progress of the Works and the instruction is not withdrawn within 28 days.
(c) The Employer or the Contractor becomes bankrupt or goes into liquidation other than for a reconstruction restructure or amalgamation.
(d) A payment certified by the Engineer or his nominee is not paid by the Employer to the Contractor within 50 days of the date of the Engineer or his nominee's certificate:
(e) The Engineer or his nominee gives Notice that failure to correct a particular Defect is a fundamental breach of Contract and the Contractor fails to correct it within a reasonable period of time determined by the Engineer or

his nominee.

(f) The Contractor does not maintain a security which is required.

(g) The Contractor has delayed the completion of works by the number of days for which the maximum amount of liquidated damages can be paid as defined in the Contract data and

(h) If the Contractor, in the judgment of the Employer has engaged in corrupt or fraudulent practices in competing for or in the executing the Contract.

(i) The Contractor threatens or misbehaves with or physical attack on any of the employee / officer of the Port

For the purpose of this paragraph: " corrupt practice" means the offering, giving, receiving or soliciting of anything of value to influence the action of a public official in the procurement process or in contract execution. "Fraudulent practice" means a misrepresentation of facts in order to influence a procurement process or the execution of a contract to the detriment of the Employer, and includes collusive practice. Bidders (prior to or after bid submission) designed to establish bid prices at artificial non-competitive levels and to deprive the Employer of the benefits of free and open competition."

60.3 When either party to the Contract gives notice of a breach of contract to the Employer for a cause other than those listed under Sub Clause 59.2 above, the Employer shall decide whether the breach is fundamental or not.

60.4 Notwithstanding the above, the Employer may terminate the Contract for convenience subject to payment of compensation to the Contractor including loss of profit on uncompleted works. Loss of profit shall be calculated on the same basis as adopted for calculation of extra/additional items.

60.5 If the Contract is terminated the Contractor shall stop work immediately, make the Site safe and secure and leave the Site as soon as reasonably possible.

61 Payment upon Termination

61.1 If the Contract is terminated because of a fundamental breach of Contract by the Contractor, the Engineer or his nominee shall issue a certificate for the value of the work done less advance payments received upto the date of the issue of the certificate, less other recoveries due in terms of the contract, less taxes due to be deducted at source as per applicable law and less any extra cost of completing the Works through other means which may be incurred by the Employer. If the total amount due to the Employer exceeds any payment due to the Contractor, the difference shall be a debt payable to the Employer.

61.2 If the Contract is terminated at the Employer's convenience or because of a fundamental breach of Contract by the Employer, the Engineer or his nominee

shall issue a certificate for the value of the work done, the reasonable cost of removal of Equipment repatriation of the Contractor's personnel employed solely on the Works, and the Contractor's costs of protecting and securing the Works and loss of profit on uncompleted works less advance payments received up to the date of the certificate, less other recoveries due in terms of the contract and less taxes due to be deducted at source as per applicable law.

62 Property

62.1 All materials on the Site, Plant, Equipment, Temporary Works and Works for which payment has been made to the Contractor by the Employer, are deemed to be the property of the Employer, if the Contract is terminated because of a Contractor's default.

63 Release from Performance

63.1 If the Contract is frustrated by the outbreak of war or by other event entirely outside the control of either the Employer or the Contractor, the Engineer or his nominee shall certify that the Contract has been frustrated. The Contractor shall leave the Site and stop work as quickly as possible after receiving this certificate and shall be paid for all work carried out before receiving it and for any work carried out afterwards to which commitment was made.

F. Labour Laws And Miscellaneous Clauses

64 Labour

64.1 The Contractor shall, unless otherwise provided in the Contract, make his own arrangements for the engagement of all staff and labour, local or other, and for their payment, housing, feeding and transport.

64.2 The Contractor shall, if required by the Engineer or his nominee, deliver to the Engineer or his nominee a return in detail, in such form and at such intervals as the Engineer or his nominee may prescribe, showing the staff and the numbers of the several classes of labour from time to time employed by the Contractor on the Site and such other information as the Engineer or his nominee may require.

65 Compliance with labour regulations.

65.1 During continuance of the contract, the Contractor and his sub Contractors shall abide at all times by all existing labour enactment and rules made there under, regulations, notifications and bye laws of the State or Central

Government or local authority and any other labour law (including rules) regulations, bye laws that may be passed or notification that may be issued under any labour law in future either by the State or Central Government or the local authority. Salient features of some of the major labour laws that are applicable to construction industry are given below. The Contractor shall keep the Employer indemnified in case any action is taken against the Employer by the competent authority on account of contravention of any of the provisions of any Act or rules made there under, regulations or notifications including amendments. If the Employer is caused to pay or reimburse such amounts as may be necessary to cause or observe, or for non-observance of the provisions stipulated in the notifications/ bye laws/ Acts/ Rules/ regulations including amendments, if any, on the part of the Contractor the Engineer or his nominee/Employer shall have the right to deduct any money due to the Contractor including his amount of performance security. The Employer/Engineer or his nominee shall also have right to recover from the Contractor any sum required or estimated to be required for making good the loss or damage suffered by the Employer.

65.2 The employees of the Contractor and the Sub-Contractor in no case shall be treated as the employees of the Employer at any point of time.

66 Safety, Security and Protection of the Environment.

66.1 Subject and without prejudice to any other provision of the Contract, the Contractor shall take all reasonable precautions:

a) In connection with the sea or any harbours, docks, rivers, streams waterways drains, watercourses, lakes, reservoirs and the like to prevent:
   (i) Silting
   (ii) Erosion of their beds or balks
   (iii) Pollution of the water so as to affect adversely the quality or appearance thereof or cause injury or death to animal and plant life.

b) In connection with underground water resources (including percolating water) to prevent
   (i) Any interference with the supply to or abstraction from such sources
   (ii) Pollution of the water so as to affect adversely the quality thereof.

(c) All works shall be carried out without unreasonable noise and disturbance. The Contractor shall indemnify the Employer from and against any liability for damages on account of noise or other disturbance created while or in carrying out the work and from and against all claims, demands, proceedings, damages, costs, charges and expenses whatsoever in regard or in relation to such liability.

(d) The Contractor at his own cost shall make such provisions for lighting of Works, Temporary Works, Materials and Plant and shall provide all such

marks and lights as may be required by the Employer or the Engineer or any other authority having jurisdiction over the Site together with all labour stores and services required for their efficient working and use at any time, day or night.

(e) The Contractor shall also provide at his own cost every description of watching and maintenance required in connection with the foregoing, and all other services for protecting and securing all places dangerous whether to Contractor's workmen or to other persons until the Works are handed over to the Employer, or till such time when the Engineer decides that such services are no longer required.

(f) All lights provided by the Contractor shall be placed or screened such as not to interfere with any navigation lights or with any traffic or signal lights of any local or other authority.

67 Insurance of Works and Contractor's Equipment

67.1 The Insurance shall be issued by any Insurance Company from its Branch at Cochin which has been determined by the Contractor to be acceptable to the Employer.

68 War Risks Insurance

68.1 If the Contractor receives instructions from the Employer to insure against war risks, such insurance if normally available shall be effected, at the cost of the Employer, with the Insurance Company acceptable to the Employer and shall be in the joint names of the Employer and the Contractor.

69 Royalties

Except where otherwise stated, the Contractor shall pay all tonnage and other royalties, rent and other payments or compensation. If any, for getting stone, sand, gravel, clay or other materials by him and his subordinates and his subcontractors and required for the works, at the rates and such conditions as notified by the State Government and shall be realized from the Contractor by way of deductions from the interim certificates and/or final certificate for payments to the Contractor for the gross quantity of material used for or in connection with the work. The royalty will not be deducted if the Contractor submits the Mineral Dispatch Permit (MDP) for the quantity executed by the Contractor for the requisite quantity of material incorporated in works for which MDPB issued.

70 Transport of Contractor's Equipment or Temporary Works

70.1 If it is found necessary for the Contractor to move one or more loads of heavy constructional plant or equipment materials or pre-constructed units or parts of units of work over roads, highways or bridges on which such oversized and overweight items are not normally allowed to be moved, the Contractor shall obtain prior permission from the concerned authorities. Payments for complying with the requirements, if any, for protection of or strengthening of the roads, highways or bridges shall be deemed to be included in his contract price.

71 Transport of Materials or Plant

71.1 The Contractor shall save harmless and indemnify the Employer in respect of all claims, proceedings, damages, costs, charges and expenses whatsoever arising out of or in relation to any claim made by the concerned authorities in respect of damage or injury to roads, highways or bridges. In case of failure of the Contractor to settle such claims and in case the Employer is held responsible for payment to the authorities, then the Employer shall settle the claim and the Employer's expenses in this regard, as certified by the Engineer, may be deducted by the Employer from any money due or to become due to the Contractor and the Engineer shall notify the Contractor accordingly with a copy to the Employer.

72 Labour Laws & Regulations

The Contractor shall at all times during the continuance of the Contract comply fully with all existing Acts, regulations and bye-laws including all statutory amendments and re-enactment of State or Central Govt. and other local authorities and any other enactments and act that may be passed in future either by the State or the Central Govt. or local authority, including Indian Workmen's Compensation Act, Contract Labour (Regulation And Abolition) Act 1970 and Equal Remuneration Act 1976, Employees' State Insurance Act, 1948, Factories Act, Minimum Wages Act, Provident Fund Regulations. Employees' Provident Fund Act and schemes made under the same Act, Health and Sanitary Arrangements for Workmen, Insurance and other benefits and shall keep the Employer indemnified in case any action is commenced for contravention by the Contractor. If the Employer is caused to pay or reimburse any amounts as may be necessary to cause or observe, or for non-observance of the provisions stipulated here-forth on the part of the Contractor, the Engineer shall have the right to recover from the Contractor any sum required estimated to be required for making good the loss or damage suffered by the Employer. The Contract shall maintain the records prescribed under ESI Regulations & EPF scheme and make the contribution towards ESI and EPF

in respect of persons employed by Contractor. The Contractor shall also make available such records for inspection by ESI Inspector and EPF organization during the inspection and furnish copies of all such records to the Employer regularly.

72.1 **Accident Prevention Officer**

The Contractor shall have on his staff on site an officer dealing with all matters regarding safety and protection against, accidents of all staff and labour. This officer shall be qualified for this work and shall have the authority to issue instructions and shall take protective measures to prevent accidents.

72.2 **Disorderly Conduct**

The Contractor shall at all times take all reasonable precautions to prevent any unlawful, riotous or disorderly conduct by or amongst his staff and labour and for the preservation of peace and protection of Persons and property in the neighbourhood of the Works from the same.

72.3 **Health and Safety**

Due precautions shall be taken by the Contractor, and at his own cost, to ensure the safety of his staff and labour and, in collaboration with and to the requirements of the local health authorities, to ensure that medical staff, first aid equipment and stores, sick bay and suitable ambulance services are available at the camps, housing and on the site at all times throughout the period of the Contract and that suitable arrangements are made for the prevention of epidemics and for all necessary welfare and hygiene requirements.

72.4 **Supply of Water**

The Contractor shall, so far as is reasonably practicable, having regard to local conditions provide on the Site, to the satisfaction of the Engineer's Representative, an adequate supply of drinking and other water for the use of the Contractor's staff and work people.

72.5 **Alcoholic Liquor or Drugs**

The Contractor shall not import, sell, give, barter or otherwise dispose of any alcoholic liquor or drugs or permit or suffer any such importation, sale, gift, barter disposal by his sub-contract agents or employees.

72.6 **Arms and Ammunition**

The Contractor shall not give, barter or otherwise dispose of to any persons or person, any arms or ammunition of any kind or permit or suffer the same as aforesaid.

72.7 **Festivals and Religious Customs**

The Contractor shall in all dealings with labour in his employment have due regard to all recognized festivals, days of rest and religious or other customs.

72.8 **Epidemics**

In the event of any outbreak of illness of an epidemic nature, the Contractor shall comply with and carry out such regulations, orders and requirements as may be made by the Government, or the local medical or sanitary authorities for the purpose of dealing with and overcoming the same.

72.9 **Employment of Person in the Service of Others**

The Contractor shall not recruit or attempt to recruit his staff and labour from amongst persons in the service of the Employer or other agencies engaged for any works of the Employer.

72.10 **Housing for Labour**

Save in so far as the Contract otherwise provides, the Contractor shall provide and maintain such accommodation and amenities as he may consider necessary for all his staff and labour employed for the purposes of or in connection with the Contract, including all fencing water supply (both for drinking and other purposes), electricity supply, sanitation, cook houses fire prevention and fire-fighting equipment, furniture other requirements in connection with such accommodation or amenities. On completion of the Contract, unless otherwise agreed with the Employer, the temporary camps/housing provided by the Contractor, shall be removed and the site reinstated to its original condition, all to the approval of the Engineer. The land for construction of labour camps shall be allotted only outside the security area to the extent available and such areas allotted as per the prevailing lease rent.

72.11 **Fair Wages, Records, Inspection**

The Contractor shall pay the labourers engaged by him on the work not less than a fair wage which expression shall mean whether for time or piecework the respective rates of wages as notified under the provisions of the Minimum

Wages Act from time to time.
The Contractor shall maintain records of Wages and other remuneration paid to his employee in such form as may be convenient and to the requirements of the Employer/Engineer and the Labour Enforcement Officer (Central), Ministry of Labour, Govt. of India, or such other authorized person appointed by the Central Govt. The Contractor shall allow inspection of the aforesaid Wage Records and Wage Slips to the Engineer and to any of his workers or to his agent at a convenient time and place after due notice is received, or to any other person authorized by him on his behalf.

72.12 **Reporting of Accidents**

The Contractor shall report to the Engineer details of any accident as soon as possible after its occurrence. In the case of any fatality or serious accident, the Contractor shall, in addition, notify the local police authorities immediately by the available means.

72.13 **Observance by Sub-Contractors**

The Contractor shall be responsible for observance by his sub-Contractors of the foregoing provisions.

72.14 **Port Entry Permission**

The Contractor shall submit prior application for Port entry passes to the concerned Port authority for his labours and the staffs engaged in the works.
The Contractor shall retain the original passes obtained by them in respect of their labour and staff engaged in the Works and produce the same to the Engineer as and when called for. It should not be either destroyed or allowed to be taken by the labour/staff after its use.

72.15 **Site - Protected Area**

The Site of Work is a protected area. Entry to the Port premises is regulated by entry passes. These passes will be issued by the Central Industrial Security Force or any other authority authorized by the Employer. The Contractor should furnish a list of person for whom the passes are to be issued to the Engineer and arrange to obtain the passes from the appropriate authority, based on the recommendation of the Engineer and abide by the Rules of the Cochin Port Authority with regard to entry etc. For the entry of trucks and other vehicles also, the Contractor should obtain necessary permits at his own cost.
The Contractor shall retain the original passes obtained by them in respect of their labour and staffs engaged in the Works and produce the same to the

Engineer as and when called for. It should not be either destroyed or allowed to be taken by the labour/staff after its use.

73 Life Saving Appliances and First Aid

73.1 The Contractor shall provide and maintain upon the Works sufficient proper and efficient life saving appliances and first aid equipment to the approval of the Engineer. The appliances and equipment shall be available for use at all times.

74 Action in case Work not done as per Specifications

All works under or in course of execution or executed in pursuance of the contract shall at all times be open and accessible to the inspection and supervision of the Engineer or his authorized subordinates in charge of the work and all the superior officers, officer of the Quality Control Organization of the Department, Vigilance Commissions, and the Contractor shall, at all times, during the usual working hours and at all other times at which reasonable notice of the visit of such officers has been given to the Contractor, either himself be present to receive orders and instructions or have a responsible agent duly accredited in writing, present for that purpose. Orders given to the Contractor's agent shall be considered to have the same force as if they had been given to the Contractor himself.

If it shall appear to the Engineer or his nominee or his authorized subordinates in charge of the work or to the Chief Vigilance Commissioner or his subordinate officers, that any work has been executed with unsound, imperfect, or unskilful workmanship, or with materials or articles provided by him for the execution of the work which are unsound or of a quality inferior to that contracted or otherwise not in accordance with the contract the Contractor shall, on demand in writing which shall be made within twelve months of the completion of the work from the Engineer or his nominee specifying the work, materials or articles complained of notwithstanding that the same may have been passed, certified and paid for forthwith rectify, or remove and reconstruct the work so specified in whole or in part, as the case may require or as the case may be, remove the materials or articles so specified and provide other proper and suitable materials or articles at his own charge and cost. In the event of the failing to do so within a period specified by the Engineer or his nominee in his demand aforesaid, then the Contractor shall be liable to pay compensation at the same rate as under Clause 49 of the contract (for non-completion of the work in time) for this default.
In such case the Engineer or his nominee may not accept the item of work at the rates applicable under the contract but may accept such items at reduced rates as the competent authority may consider reasonable during the

preparation of on account bills or final bill if the item is so acceptable without detriment to the safety and utility of the item and the structure or he may reject the work outright without any payment and/or get it and other connected and incidental items rectified, or removed and re-executed at the risk and cost of the Contractor. Decision of the Engineer or his nominee to be conveyed in writing in respect of the same will be final and binding on the Contractor.

75 Action where no Specifications are specified

In the case of any class of work for which there are no such specifications as referred to in Clause 16, such work shall be carried out in accordance with the Bureau of Indian Standards Specifications. In case there are no such specifications in Bureau of Indian Standards, the work shall be carried out as per manufacturers specifications. In case there are no such specifications as required above, the work shall be carried out in all respects in accordance with the instructions and requirements of the Engineer or his nominee.

76 Bribes

76.1 If the Contractor, or any of his Sub Contractors, agents or servants gives or offers to give to any person any bribe, gift, gratification or commission as an inducement or reward for doing or forbearing to do any action in relation to the Contract or any other contract with the Employer, or for showing or forbearing to show favour or disfavour to any person in relation to the Contract or to any other contract with the Employer, then the Employer may enter upon the Site and the works and terminate the employment of the Contractor and the provisions of Clause 59 hereof shall apply as if such entry and termination had been made pursuant to that Clause.

(i) The bidders shall give an undertaking that they have not made any payment or illegal gratification to any person/authority connected with the bid process so as to influence the bid process and have not committed any offence under the Prevention of Corruption Act in connection with the bid.

(ii) The bidders shall disclose any payments made or proposed to be made to any intermediaries (agents etc) in connection with the bid.

77 Details to be Confidential

77.1 The Contractor shall treat the details of the contract as private and confidential, save insofar as may be necessary for the purposes thereof, and shall not publish or disclose the same or any particulars thereof in any trade or technical paper of elsewhere without the previous consent in writing of the Employer. If any dispute arises as to the necessity of any publication or

disclosure for the purpose of the Contract the same shall be referred to the decision of the Employer whose award shall be final.

78 Contractor's Temporary works, office etc

78.1 The Contractor shall submit to the Engineer for his approval not less than 15 days before commencement of erection of any part of Temporary Works, drawings and detailed proposals for the method of construction of Temporary works such as office, store, false work and temporary platforms, pre-casting yard, workshop, etc. which he intends to construct for the execution of the contract and no such work shall be constructed before obtaining the written approval of Engineer or his nominee. These temporary works, office, store etc. shall be erected at or near the work area subject to approval of the Employer and the land space for the same will be allotted free of ground rent to the extent available. The Contractor shall obtain permission for any Temporary Works and would ensure that during execution of works the statutory requirements of the concerned authorities such as Cochin Port Authority, Police, Customs, etc. would be complied with.

79 Submission of Reports, Returns etc

All reports, statements, returns, drawings, diagrams etc. which the Contractor is required to submit to the Engineer during the progress of the Works, shall be furnished in triplicate without any additional cost.

80 Water Supply

80.1 ***Cochin Port Authority will not provide/ supply water for the work. Water has to be arranged by the contractor himself for the construction works including curing work at his own risk and cost.***

81 Power Supply

81.1 The Electricity connection for lighting, welding and other mechanical works to the extent available will be made available by the Employer within the Port area. Drawing of power lines/cables etc. from the available source of supply of power to the actual work site, providing switches and making connections etc. shall be arranged by the Contractor at his cost. The temporary lines and connections by the Contractor shall be approved by the Engineer's representative before availing power. The Contractor shall provide Energy Meter to read consumption in units.

81.2 The Contractor shall indicate his requirement of power to the Engineer within 15 days from the date of the letter of acceptance of the tender. The Contractor

shall pay to the Employer, the power charges as per the prevailing Tariff schedule of Cochin Port Authority in force during the work of the Contractor. The Contractor shall also pay the connection and disconnection charges as applicable.

81.3 The Contractor shall submit a complete drawing of the power points, wiring, diagram indicating all electrical loads, earthing etc. in complete shape along with the completion report. The Energy Meter provided is calibrated by Kerala State Electrical Inspectorate /TMR division, KSEB and such a Certificate to be produced. For non supply of power at any stage port will not be responsible and the Contractor shall not have any claim whatever for loss or damage.

81.4 If there is any disruption in the power supply due to supply failure/restrictions imposed by the Kerala State Electricity Board, the department shall not be held responsible and the Contractor has to make suitable alternative arrangements like generator, welding set etc. at their cost.

82 Taxes and Duties

82.1 The Contractor shall pay Sales Tax, Excise Duty and other levies as applicable from time to time in respect of all materials, equipment and other items purchased for the work.

82.2 Sales / Turnover Tax on Works Contract

Deduction of Sales/Turnover tax on works Contract shall be made by the Employer from each certificate of payment to the Contractor at the rate applicable for such Contractors, as TDS or such other rates as may be specified by the State Government from time to time. TDS certificates will be issued to the Contractor which he may produce before the Tax Authority for adjustment against his tax liability as per assessment.

82.3 Income Tax

The Contractor and his staff shall be responsible for payment of all personal income taxes to the concerned authorities as per the law in force from time to time. Deduction of Income Tax shall be made by the Employer from each certificate of payment to the Contractor at the rate of 2% plus surcharge or such other rates as may be specified by the Central Government from time to time, on the gross amount of the Contractor’s bill for payment.

83 Noise and Disturbance

83.1 All works shall be carried out without unreasonable noise and disturbance.

The Contractor shall indemnify the Employer from and against any liability for damages on account of noise or other disturbance created while or in carrying out the work and from and against all claims demands proceedings damages costs charges and expenses whatsoever in regard or in relation to such liability.

84 Safety Code

84.1 Necessary Indian Dock Safety regulations for the safety purpose shall be adhered to by the Contractor and he will be held responsible for any violations of the same. The set of such conditions (regulation) is available with Cochin Port Authority and the Contractor is required to go through it before tendering.

84.2 Besides the above, the Contractor shall also scrupulously adhere to and observe the following safety codes:

(i) The Contractor has to provide sufficient barricades to site of work so that traffic plying nearby should not damage the recently concreted work. In case of any damage on account of above, the entire responsibility will remain with Contractor and nothing extra will be paid on this account.

(ii) Suitable and strong scaffolds should be provided for the workmen for all work that cannot be safely done from ground.

(iii) No portable single ladder shall be over 8 meters in length. The width between the side rails shall not be less than 30 cm (clear) and the distance between the two adjacent rungs shall not be more than 30 cm.

(iv) Hoisting machines and tackles used in the works including their attachments, anchorage and supports shall be in perfect condition as per stipulations of the relevant Rules. The ropes used and hoisting or lowering materials or as means or suspension shall be of durable quality and adequate strength and free from defects.

(v) The excavated material shall not be placed within 1.5 meters of the edge of the trench or half of the depth of the trench, whichever is more. All trenches and excavation shall be provided with necessary fencing to lighting. Every opening in the floor of a building or in a working platform be provided with suitable fence to prevent the fall of persons or materials. No floor, roof or other parts of the structure shall be so overloaded with debris or materials as to render it unsafe.

(vi) Workers employed on mixing and handling materials such cement, cement mortars concrete, lime mortar and asphalt shall be provided with protective footwear and rubber hand gloves and thin cloth for covering face and head.

(vii) Those engaged in welding work shall be provided with welder protective eye shield and glove.

(viii) All safety rules shall be strictly followed while working on live electrical systems or installations as stipulated in the relevant Rules.

85 Port Authority Rules

85.1 The Contractor shall observe the Conservancy Rules relating to the harbour and shall always take such necessary additional steps to keep the harbour waters free of noxious or unhygienic matters coming from his works as are required by the Employer. Under no circumstances shall inflammable materials be allowed to spill into the harbour waters.

85.2 The Contractor shall always observe and comply with the working rules and regulations of the Port Authority in force or as issued from time to time.

85.3 The Contractor's plants, equipments, floating crafts, dredgers, materials etc. which are brought to site for facilitating the proper execution of the contract work within the port area are not liable to port dues and charges like wharfage, berth hire and other charges during the period of contract and until expiry of defect liability period.

86 Execution of work

86.1 The Contractor shall be required to execute the work in such a way so as not to cause any damage, hindrance or interference with port activities going on in the area or nearby. He should not also deposit the materials at such places which may cause inconvenience to the public and the work going on in the nearby area. The Contractor shall have to make good all damages done by him to the structures nearby while executing the work and no extra payment shall be made to him on that account.

86.2 All the materials required to be used in the work shall have to be got approved from the Engineer-in-Charge before stacking at the site of work.

86.3 Barricading, including proper lighting arrangement in the night at the required places shall have to be provided by the Contractor at his own cost, including necessary arrangements for proper movement of traffic by carefully maintained approaches and road diversions with suitable sign boards for indications of road signs etc. as directed by the Engineer-in-Charge.

87 Drawings & Designs

(a) General details of the works are shown on the drawings accompanying the tender document. The Engineer will supply to the Contractor from time to time during the progress of the works such further working drawings as will

be necessary in his opinion for the proper and adequate execution and maintenance of the Works in accordance with the Engineer's designs and/or any modification thereof as decided by the Engineer and the Contractor shall carry out the work in accordance with the said working drawings. Two sets of such working drawings will be issued. If the Contractor requires more sets he will have to make his own arrangement at his cost.

Residual Design, Detailing & Engineering: - Generally, detailed design and engineering of the work shall be provided by the Engineer. During execution of the work the residual design, detailing and engineering, if needed, is to be carried out by the Contractor at no extra cost to the Employer. Such design, detailing & engineering shall be got approved by the Contractor from the Engineer. For equipments/ Installations detailed drawings need to be produced by the Contractor at no extra cost to the Employer. Such detailing & engineering shall be got approved by the Contractor from the Engineer.

(b) In the event of the Contractor proposing any alteration/ modification to the Engineer's design, detail, method of construction, he shall at his own expenses prepare and submit for approval of the Engineer copies in duplicate (in the first instance) of detailed working drawings which may be required for such alteration/ modification and at the same time call the attention of the Engineer to any alternative detail or modification of the contract drawings which the Contractor may wish to make at least 30 days prior to the commencement of the work or part of the work to which such drawings relate. The Contractor shall at the same time, if so required by the Engineer, furnish calculation sheets in duplicate relating to the strength and anticipated deflections in respect of such altered/ modified works. The Engineer will, after any such alteration which he may approve, record on the copies as amended his approval and will return one copy of the drawings and calculation sheets to the Contractor, who shall carryout the work in accordance therewith. The Contractor shall forward to the Engineer three additional copies of the working drawings and calculation sheets as approved in additions to these working drawings and calculation sheets as approved. In addition to these, working drawings are also to be submitted (the same procedure as in the case of the Contractor) in respect of any work proposed to be executed by sub-Contractors. The approval of the Engineer of all or any of the calculation sheets, drawings shall not relieve the Contractor of responsibility in connection with the execution of the altered/ modified or Sub Contractor's work.

(c) Three complete sets of tracing film of all drawings showing every and all works 'As Made' under the Contract shall be made by the Contractor at his own expense and delivered to the Engineer within one month of the

completion of the various sections of the work or at such times as directed by the Engineer. All departure /alteration /modifications from the Contract Drawings and supplementary working drawings issued by the Engineer also shall be incorporated in the "As Built" drawings. The drawings shall be fully dimensioned, of an approved size and as approved by the Engineer.

88 Monsoon Period

Normally Monsoon period will be reckoned from 1st June to 30th September.

89 Reports

The following reports shall be submitted for review as an input to the Management meeting to be held as per Clause No 31 of Conditions of Contract

89.1 Daily reports

The Contractor shall submit daily report indicating daily activities, weather condition, actual manpower, equipment and the materials arriving on site.

89.2 Monthly Reports

Monthly progress reports shall be prepared by the Contractor and submitted to the Engineer in triplicate. The first report shall cover the period up to the end of the first calendar month following the Commencement Date. Reports shall be submitted monthly thereafter, each within 7days after the last day of the period to which it relates. Reporting shall continue until the Contractor has completed all work, which is known to be outstanding at the completion date, stated in the Taking-Over Certificate for the Works.
Each report shall include:

a) Charts and detailed descriptions of progress, including each stage of design (if any), Contractor's Documents, procurement, manufacture, delivery to Site, construction, erection and testing; and including these stages for work by each Sub-Contractor,
b) Photographs in hardcopy & digital copy and videography in two sets showing the various stages of progress on the Site monthly;
c) For the supply of manufactured items, the name of the manufacturer, manufacture location, percentage progress, and the actual or expected dates of:
    (i) Commencement of manufacture,
    (ii) Contractor's/ Engineer's inspections,
    (iii) Tests,

(iv) Shipment and arrival at the Site;

d) Copies of quality assurance documents, test results and certificates of Materials;

e) Safety statistics, including details of any hazardous incidents and activities relating to environmental aspects and public relations; and

f) Comparisons of actual and planned progress, with details of any events or circumstances which may jeopardise the completion In accordance with the Contract, and the measures being (or to be) adopted to overcome delays.

90 Completion Documents

90.1 To treat that the work has been completed and issue a final payment certificate, the following documents will be deemed to form the completion documents:

i) The Technical documents according to which the work was carried out.

ii) The set of construction drawings showing therein the modifications and corrections made during the course of execution signed by the Engineer.

iii) Certificates of final levels and dimensions as set out for various works.

iv) Certificates of tests performed for various works.

v) “As Built” Drawings.

91 Changes in firm's Constitution to be intimated

The Contractor shall intimate the Engineer in writing of any change made in the constitution of the firm

92 Indemnities

The Contractor shall indemnify and hold harmless the Employer, the Employer's Personnel, and their respective agents, against and from all claims, damages, losses and expenses (including legal fees and expenses) in respect of:

(a) Bodily injury, sickness, disease or death, of any person whatsoever arising out of or in the course of or by reason of the Contractor's design (if any), the execution and completion of the Works and the remedying of any defects, unless attributable to any negligence, willful act or breach of the Contract by the Employer, the Employer's Personnel, or any of their respective agents, and

(b) Damage to or loss of any property, real or personal (other than the Works), to the extent that such damage or loss:

(i) Arises out of or in the course of or by reason of the Contractor's design (if any), the execution and completion of the Works and the remedying of any defects, and

(ii) Is attributable to any negligence, willful act or breach of the Contract by the Contractor, the Contractor's Personnel, their respective agents, or anyone directly or indirectly employed by any of them.

G. Salient Features of Some Major Laws Applicable To Establishments Engaged In Construction Work.

(a) Workmen Compensation Act 1923:- The Act provides for compensation in case of injury by accident arising out of and during the course of employment.

(b) Payment of Gratuity Act 1972: Gratuity is payable to an employee under the Act on satisfaction of certain conditions on separation if an employee has completed 5 years service or more on death at the rate of 15 days wages for every completed year of service. The Act is applicable to all establishments employing 10 or more employees.

(c) Employees P.F and Miscellaneous Provision Act 1952: The Act Provides for monthly contributions by the Employer plus workers @ 12% / 8.33%. The benefits payable under the Act are:

(i) Pension or family pension on retirement or death, as the case may be.
(ii) Deposit linked insurance on the death in harness of the worker.
(iii) Payment of P.F accumulation on retirement/death etc.

The employees employed by the Contractor for the work of Port Authority have to be enrolled under the relevant scheme of the EPF & MP Act 1952. The Contractor shall produce documents pertaining to the same for verification to the Engineer/ his nominee. Further the Contractor has to pay the necessary monthly contributions to the said scheme in respect of the employees employed by him for the work of CoPT and shall produce necessary document to show that the monthly contribution in respect of these employees due to the said scheme are paid.

In case the contractor has not paid the EPF contribution same will be recovered in the running bill and paid to the EPF Organization. Any delay in payment of contribution payable under the Act may be recovered as an arrear of Land Revenue

(d) Maternity Benefit Act 1951:-The Act provides for leave and some other benefits to workmen/ employees in case of confinement or miscarriage etc.

(e) Contract Labour (Regulation & Abolition) Act 1970:-The Act provides for certain welfare measures to be provided by the Contractor to contract labour and in case the Contractor fails to provide, the same are required to be provided, by the Principal Employer by Law. The Principal Employer is required to- take Certificate of Registration and the Contractor is required to take license from the designated Officer. The Act is applicable to the establishments or Contractor of Principal Employer if they employ 20 or

more contract labour.

(f) Minimum Wages Act 1948: The Employer is supposed to pay not less than the Minimum Wages fixed by appropriate Government as per provisions of the Act if the employment is a scheduled employment Construction of Buildings, Roads, Runways are scheduled employment.

(g) Payment of Wages Act 1936:-It lays down as to by what date the wages are to be paid when it will be paid and what deductions can be made from the wages of the workers.

(h) Equal Remuneration Act 1979:-The Act provides for payment of equal wages for work of equal nature to Male and Female workers and for not making discrimination against Female employees in the matters of transfers, training and promotions etc.

(i) Payment of Bonus Act 1965: The Act is applicable to all establishments employing 20 or more employees. The Act provides for payments of annual bonus subject to a minimum of as per the provision of the Act and amendment issued from time to time. The Act does not apply to certain establishments. The newly set-up establishments are exempted for five years in certain circumstances. Some of the State Governments have reduced the employment size from 20 to 10 for the purpose of applicability of this Act.

(j) Inter-State Migrant workmen's (Regulation of Employment & Conditions of Service) Act 1979: The Act is applicable to an establishment which employs 5 or more inter-state migrant workmen through an intermediary (who has recruited workmen in one state for employment in the establishment situated in another state). The Inter-State migrant workmen, in establishment to which this Act becomes applicable, are required to be provided certain facilities such as housing, medical aid, travelling expenses from home upon the establishment and back,

(k) The Building and Other Construction workers (Regulation of Employment and Conditions of Service) Act 1996 and the Cess Act of 1996:-All the establishments who carry on any building or other construction work and employs 10 or more workers are covered under this Act. All such establishments are required to pay cess at the rate not exceeding 2% of the cost of construction as may be modified by the Government. The Employer of the establishment is required to provide safety measures at the Building or Construction work and other welfare measures, such as Canteens, First-Aid facilities. Ambulance, Housing accommodations for workers near the work place etc. The Employer to whom the Act applies has to obtain a registration certificate from the Registering Officer appointed by the Government.

(l) ESI Act, 1948:-

(i). As per the Govt. Notification dt. 20.07.09, Cochin Port Authority has registered under the ESI Act with ESI Corporation and provision of ESI Act, 1948 are applicable to contract/casual employees drawing

wages/Salary upto Rs.15,000/- per month and working in Cochin Port Authority. Workers covered under ESI Act, are entitled for full medical care for self and family. Besides, cash benefit in the event of sickness, maternity and employment injury. Accordingly, the contractual/casual employees drawing wages upto Rs. 15,000/-per month employed either directly by Port Authority or through contractor are covered under ESI Act, 1948. It is obligatory on the part of the employer to calculate and remit ESI contribution comprising of employers' share of 4.75% plus employees' share of 1.75% which is payable on or before 21st of the following month, to which the salary relates.

(ii). In case the Contractor employs more than 20 employees, they should register their name with ESI scheme as per ESI Act, 1948 and obtain ESI Code. Both Employers share of 4.75% and Employees contribution of 1.75 % (recovered from employees), totally 6.5% to be paid as contribution to ESI in their Code on or before 21st of following month to which the salary relates and acknowledgment for the same shall be submitted to the Port while claiming the bill. The bill without the acknowledgement of ESI contribution will not be entertained. In case the contractor has not paid the ESI contribution same will be recovered in the running bill and paid to the ESI Corporation in contractor's code. Any delay in payment of contribution payable under the Act may be recovered as an arrear of Land Revenue.

(iii). In case the contractor employs less than 20 employees, the list of employees' name, their father's name, identification proof, one passport photo shall be submitted to the Port Authority. The contribution of ESI amount, both Employers share of 4.75% and Employees of 1.75% (recovered from Employees salary), totally 6.5% shall be paid by the contractor in the Cochin Port Authority Code on or before 21st of the following month to which the salary relates or otherwise payment to the contractor will be withheld. If the contractor fails to comply with the above instruction, then the Principal Employer (Cochin Port Authority) will make payment to the ESI Corporation. Such amount will be deducted from any amount due to the contractor. Any delay in payment of contribution payable under the Act may be recovered as an arrear of Land Revenue.

(iv). As per the above Government Notification

i) All intending tenderer at the time of tender shall disclose all necessary documents as to whether they are covered under ESI Act or not.

ii) in case they are covered under ESI Act, they have to furnish the details of registration.

SECTION -II

COCHIN PORT AUTHORITY

2. FORM OF SECURITIES (ANNEXURE A, B& C)

Sl. No.	Annexure	Description	Page No.
1	A	Proforma of Bank Guarantee for Performance Guarantee/ Security Deposit	138-140
2	B	Format for Insurance Surety Bond towards Performance Security	141-143
3	C	Proforma of Bank Guarantee for Advance	144-145

Annexure –A

PROFORMA OF BANK GUARANTEE FOR PERFORMANCE GUARANTEE/ SECURITY DEPOSIT

(To be executed on non-judicial Stamp Paper of appropriate value)

[The bank, as requested by the successful Tenderer, shall fill in this form in accordance with the instructions indicated]

In consideration of the THE BOARD OF MAJOR PORT AUTHORITIES FOR COCHIN PORT AUTHORITY, a body corporate under the Major Port Authority Act, 2021 having office on Willingdon Island, Cochin – 682009 (hereinafter called "The Board" which expression shall unless excluded by or repugnant to the context or meaning thereof be deemed to include the Board of Major Port Authorities for Cochin Port, its successors and assigns) having agreed to exempt _____ (hereinafter called the "Contractor")'(Name of the Contractor/s)from the demand under the terms and conditions of the Contract, vide _____ 's letter No._____ (Name of the Department)date _____ made between the Contractors and the Board for execution of _____ covered under Tender No._____ dated _____ (hereinafter called "the said contract") for the payment of Security Deposit in cash or Lodgement of Government Promissory Loan Notes for the due fulfilment by the said Contractors of the terms and conditions of the said Contract, on production of a Bank Guarantee for Rs._____ (Rupees_____) only we, the (Name of the Bank and Address) _____ _____ (hereinafter referred to as "the Bank") at the request of the Contractors do hereby undertake to pay to the Board an amount not exceeding Rs._____ (Rupees _____) only against any loss or damage caused to or suffered or which would be caused to or suffered by the Board by reason of any breach by the Contractors of any of the terms and conditions of the said contract.

2. We, _____, _____, do hereby(Name of Bank) (Name of Branch)undertake to pay the amounts due and payable under this guarantee without any demur merely on a demand from the Board stating that the amount claimed is due by way of loss or damage caused to or which would be caused to or suffered by the Board by reason of any breach by the Contractors of any of the terms and conditions of the said contract or by reason of the Contractors failure to perform the said

contract. Any such demand made on the Bank shall be conclusive as regards the amount due and payable by the Bank under this Guarantee. However, our liability under this guarantee shall be restricted to any amount not exceeding Rs._____ (Rupees _____) only.

3. We, _____(Name of Bank and Branch)_____, undertake to pay to the Board any money so demanded notwithstanding any dispute or disputes raised by the Contractor(s) in any suit or proceeding pending before any Court or Tribunal relating thereto our liability under this present being absolute and unequivocal. The payment so made by us under this bond shall be a valid discharge of our liability for payment there under and the Contractor(s) shall have no claim against us for making such payment.

4. We, _____(Name of Bank and Branch) further agree with the Board that the guarantee herein contained shall remain in full force and effect during the period that would be taken for performance of the said contract and that it shall continue to be enforceable till all the dues of the Board under or by virtue of the said contract have been fully paid and its claims satisfied or discharged or till the _____ (Name of the user department) of the said certifies that the terms and conditions of the said contract have been fully and properly carried out by the said Contractors and accordingly discharge this guarantee. PROVIDED HOWEVER that the Bank shall be the request of the Board but at the cost of the Contractors, renew or extend this guarantee for such further period or periods as the Board may require from time to time.

4. We, _____ further agree with the Board (Name of Bank and Branch)that the Board shall have the fullest liberty without our consent and without affecting in any manner our obligations hereunder to vary any of the terms and conditions of the said contract or to extend the time of performance by the said contract or to extend the time of performance by the said Contractors from time to time or to postpone for any time or from time to time any of the powers exercisable by the Board against the said Contractors and to forebear or enforce any of the terms and conditions relating to the said contract and we shall not be relieved from our liability by reason of any such variation or extensions being granted to be Contractors or for any forbearance, act or omission on the part of the Board or any indulgence shown by the Board to the Contractors or by any such matter or thing whatsoever which under the law relating to sureties would, but for this provision, have effect of so relieving us.

5. This guarantee will not be discharged due to the change in the constitution of the Bank or the Contractor(s).

6. It is also hereby agreed that the Courts in ***[insert city]*** would have exclusive jurisdiction in respect of claims, if any, under this Guarantee.

7. We, _____ Bank lastly undertake not to revoke this guarantee during its currency except with the previous consent of the Board in writing.

8. Notwithstanding anything contained herein :

a) Our liability under this Bank Guarantee shall not exceed Rs._____ (Rupees _____ only);
b) this Bank Guarantee shall be valid upto ___*_____; and
c) we are liable to pay the guarantee amount or any part thereof under this Bank Guarantee only and only if you serve upon us a written claim or demand on or before _____ (date of expiry of Guarantee)."

Date _____ day of _____ 20

For (Name of Bank)

(Name)

Signature

* The date will be thirty (30)days after the end of the period of Defect Liability as specified in the Contract.

Annexure - B

FORMAT FOR INSURANCE SURETY BOND TOWARDS PERFORMANCE SECURITY

(To be stamped in accordance with Stamp Act of India)

[From the Insurance Company duly approved by Insurance Regulatory and Development Authority of India]

Insurance Surety Bond No.: Date:

Amount of Insurance Security Bond: Rs……
Security Bond cover period from…….to…..upto claim period ……..

THIS INSURANCE SURETY BOND executed on……..at …….. by ….(Name and Address of the Insurer) (hereinafter called "the Insurer", which expression shall unless it be repugnant to the subject or context thereof, include its executors, successors administrators, and assigns;

IN FAVOUR OF
The Board of Trustees of the Cochin Port Authority constituted under the Major Port Authorities Act, 2021 (hereinafter called "the Employer" which expression shall unless excluded by or repugnant to the context or meaning thereof be deemed to include its successors, administrators, executors and assigns;

WHEREAS ……. (Usual wordings used in case of Bank Guarantees)
WHEREAS……. – do-
WHEREAS…… -do-

In consideration of the Authority having awarded to M/s..... [Contractor's Name]..... with its Registered/Head Office at ..... (Hereinafter referred to as the 'Contractor', which expression shall unless repugnant to the context or meaning thereof, include its successors administrators, executors and assigns), a Contract by issue of Authority's Work Order No..... dated……. and the same having been unequivocally accepted by the Contractor, resulting into a Contract bearing No..... dated ....., valued at ..... for and the Contractor having agreed to provide a Contract Performance Guarantee for the faithful performance of the entire Contract equivalent to .....(amount).....% (percent) of the said value of the Contract to the Authority.

We .....[Name & Address of the Insurer] ..... having its Head Office at ..... (hereinafter referred to as the 'Insurer' do hereby guarantee and

undertake to pay the Authority, on demand any and all amount payable by the Contractor to the extent of .....(*)..... as aforesaid at any time up to ..... [days/month/year] without any condition, demur, reservation, contest, recourse or protest and/or without any reference to the Contractor. Any such demand made by the Authority on the Insurer shall be conclusive and binding notwithstanding any difference between the Authority and the Contractor or any dispute pending before any Court, Tribunal, Arbitrator or any other authority. The Insurer undertakes not to revoke this Insurance Surety Bond during its currency and or any period extended under the contract, without prior consent of the Authority and further agrees that the guarantee herein contained shall be enforceable till the Employer discharges this guarantee.

The Employer shall have the fullest liberty, without affecting in any way the liability of the Insurer under this Insurance Surety Bond, from time to time to extend the performance of the Contract by the Contractor for the purpose of which, the Insurer shall be liable to extend the validity of the present Insurance Surety Bond without any demur, condition, protest and the Insurer shall at no point in time have an option of revoking the same, The Employer shall have the fullest liberty, without affecting this Insurance Surety Bond, to postpone from time to time the exercise of any powers vested in them or of any right which they might have against the Contractor, and to exercise the same at any time in any manner, and either to enforce or to forbear to enforce any covenants, contained or implied, in the Contract between the Employer and the Contractor or any other course or remedy or security available to the Employer. The Insurer shall not be released of its obligations under these presents by any exercise by the Employer of its liberty with reference to the aforesaid or any of them or by reason of any other act or forbearance or other acts of omission or commission on the part of the Employer or any other indulgence shown by the Employer or by any other matter or thing whatsoever which under law would, but for this provision, have the effect of relieving the Insurer.
The Insurer also agrees and undertakes that the Employer at its option shall be entitled to enforce this Insurance Surety Bond against the Insurer as a Surety, in the first instance without proceeding against the Contractor and notwithstanding any security or other guarantee that the Employer may have in relation to the Contractor's liabilities.
This Surety Bond will not be discharged due to the change in the constitution of the Insurer or the Contractor. It is also hereby agreed that only Courts at Kochi in Kerala shall have exclusive jurisdiction in respect of all matters, including any demands claims, under this Surety Bond.

Notwithstanding anything contained hereinabove:

(a) Our liability under this Insurance Surety Bond shall not exceed Rs…. (Rupees……. Only)

(b) This Insurance Security Bond shall remain in force upto and including ..... and encash able at …..(address of Insurer)….

(c) We are liable to pay the Surety Bond amount or any part thereof under this Surety Bond only and only if you serve upon us a written claim or demand on or before ……(3 months from validity date.)

IN WITNESS WHEREOF the Insurer has set its hands hereunto on the day, month and year first hereinabove written.

Dated this ..... day of ..... 2026..... at.....

(Signature) .....
(Designation with Insurer Stamp)
Authorised Vide Power of Attorney
No.....Date.....

WITNESS :
1. .....
(Signature) .....
(Name) .....
(Official Address)

2. .....
(Signature) .....
(Name) .....
(Official Address)

Notes :
1. The Insurance Surety Bond shall be from an Insurer as per guidelines issued by Insurance Regulatory and Development Authority of India (IRDAI).
2. The Insurance Surety Bond should be on Non-Judicial stamp paper/e-stamp paper of appropriate value as per Stamp Act prevailing in the state(s) where the Insurance Surety Bond is submitted or is to be acted upon or the rate prevailing in State where the Insurance Surety Bond is executed, whichever is higher

Annexure - C

PROFORMA OF BANK GUARANTEE FOR ADVANCE

(To be submitted on Non-Judicial Stamp Paper of appropriate value)

Bank Guarantee No_____ dated_____

Amount of Guarantee Rs. _____
Guarantee cover from _____ to _____Last date of lodgement of claim

In consideration of Board of Major Port Authority for Cochin Port (hereinafter called "Port Authority") which expression shall include all their successors and assignees having agreed to pay advance of Rs. _____ (Rupees _____ only) repayable with interest @_____ % per annum to _____ (Name & Address of contractor) (hereinafter called the "CONTRACTOR") which expression shall include their successors and assignees for the contract for the work of _____(Name of work) evidenced by the offer of the Contractor dated…….. and accepted by the Port Authority forming the contract and the work order No……..dated,……. for the work of (name of work) issued by the Port Authority and the formal stamped agreement to be entered into between parties in the above, the said amount and interest being recoverable from the running bills of the contractor on pro-rata basis as per terms of agreement, we (Name of Bank) having our Head office at …….. (hereinafter referred to as "the Bank") do hereby undertake to pay The Cochin Port Authority an amount of Rs……(Rupees……..only) with interest against any loss or damage caused to or would be caused to or suffered by the Port Authority by reason of any breach by the said contractor of any of the terms or conditions contained in the said agreement, making it impossible or difficult to recover the said mobilization advance of Rs……(Rupees……..only) or part thereof or interest thereon we (Name of the Bank)do hereby undertake to pay the amounts due and payable under the guarantee without any demur, merely on demand of The Cochin Port Authority by reason of any breach by the said contractor of any of the terms and conditions contained in the said agreement or by the reason of contractor's failure to perform the said agreement. Any such demand made on the Bank shall be conclusive not only as regards to contractor's failure but also as regards the amount due and payable by the Bank under this guarantee. However, our liability under this guarantee will be restricted to an amount of Rs…….(Rupees…….. only) with interest as per the agreement.

We, (Name of the Bank) further agree the guarantee herein contained will remain in full force and affect during the period that would be taken for the recovery of the loan and that it shall continue to be live and enforceable till all the amounts due with interest thereon have been fully recovered and its claims satisfied or discharged or till The Cochin Port Authority certifies that the amount outstanding under the advance has

been fully recovered from the contractor and accordingly discharged the guarantees. Unless a demand or claim under this guarantee is made on us in writing on or before (date of the expiry) we shall be discharged from all liability under this guarantee thereafter.

We, (Name of the Bank) further agree with the Port Authority that the Port Authority shall have the fullest liberty without or consent and without affecting in any manner or obligation hereunder to vary any of the terms and conditions regarding the recovery or repayment and we shall not relieved from our liability by reason of any such variation or extension being granted to the said contractor or any forbearance, act or omission on the part of Cochin Port Authority or any indulgence by the Port Authority to the contractor or in such matter or things whatsoever which under the law relating to sureties would but for this provision have the effect of so relieving us.

Notwithstanding anything contained herein:

(i) Our liability under this bank guarantee shall not exceed Rs……..(Rupees……)

(ii) This bank guarantee shall be valid upto……

(iii) Our liability to make payment shall arise and we are liable to pay the guaranteed amount or any part thereof under this guarantee, only if you serve upon us a written claim or demand in terms of this guarantee on or before…….

We, (Name of the Bank) lastly undertake not to revoke this guarantee during its currency except with the previous consent of the Port Authority in writing.

Dated this the……day of……..(year)

For (Name of Bank) (Signature)

SECTION - III

COCHIN PORT AUTHORITY

CIVIL ENGINEERING DEPARTMENT

Tender No: **T10/T-2117/2026-C**

Tender for

RECONSTRUCTION OF MARAR ROAD AND G. V. IYYER ROAD WITH CC PAVER BLOCKS, RCC DRAINS, BOX CULVERTS, UTILITY DUCTS ETC., AT W/ISLAND

INDEX

SECTION – III

Sl. No.	Clause/ Sections	Description	Page No.
1	1.	General Description of work	148-162
2	2.	Special Conditions of Contract	164-176

SECTION -III
COCHIN PORT AUTHORITY

1. GENERAL DESCRIPTION OF WORK

Clause/ Sections	Description	Page No.
1	General	148
2	Scope of work	148-151
3	Site Conditions	151-155
3.1	Location	151
3.2	Reference Level	152
3.3	Tide and Flood Levels	152
3.4	Current	152
3.5	Wind	152-153
3.6	Rainfall	153
3.7	Temperature	153
4	Drawings	153
5	Time Schedule and monitoring of progress	153
6	Facilities to be provided by the Port	154
6.1	Contractor’s work area	154
6.2	Power	154
7	Contractor’s responsibility	154-159
8	Workmanship	159
9	Temporary works	159-160
10	Time For Completion	160
11	Working time	160
12	Method of Execution	160-161
13	Alterations and Additions	161-162
14	Site handing over in stages	162

COCHIN PORT AUTHORITY
SECTION -III

1. GENERAL DESCRIPTION OF WORK

1. General

Where it is mentioned in the Specifications that the Contractor shall perform certain Work or provide certain facilities, it is understood that the Contractor shall do so at his own Cost.

The materials, design and workmanship shall satisfy the relevant Indian Standard, Specification and conditions herein referred to. Where the Specifications stipulate requirement in addition to those contained in the Standard codes and Specifications, these additional requirements shall also be satisfied.

2. Scope of work

The overall scope of work is divided into four primary segments:

(i) Part-A: Re-surfacing Marar Road

Part-A1: Construction of new drains with electrical cable duct & data cable duct and box culverts at road crossings.

(a) **Demolition**: Demolishing/ dismantling existing RCC drains and flexible pavement.

(b) **Removal of paver blocks**: Taking out existing CC interlocking paver blocks, disposal of unserviceable material to the dumping ground, and stacking of serviceable material within 50 metre lead.

(c) **Earthwork excavation and Bedding concrete**: Earth work excavation for new drains and laying bedding concrete with 1:3:6 cement concrete.

(d) **Concrete & steel reinforcement work**: Casting drains with cable duct using RCC 1:1.5:3 (1 cement: 1.5 coarse sand (zone-III) : 3 graded stone aggregate 20 mm nominal size) and Fe500 and above grade reinforcement.

(e) **Box Culvert**: Construction of RCC Box Culvert cement concrete of M25 grade.

(f) **110mm dia. PVC pipe**: Providing and laying 110mm OD PVC pipe (class 2) buried/ above ground for drainage disposal.

Part-A2: Re-surfacing road with paver blocks.

(a) **Scarifying existing metalled road surface:** This includes scarifying the metalled (water bound) road surface and disposal of rubbish up to a lead of 50m and consolidation of the aggregates received from scarifying with power road roller of 8 to 10 tonne capacity.

(b) **WMM layer**: Providing and laying Wet Mix Macadam (WMM), including spreading and compacting graded stone aggregate with size range 53 mm to 0.075 mm to WMM specification including premixing the material with water at OMC in for all leads & lifts, laying in uniform layers with mechanical paver finisher in sub-base/ base course on well-prepared surface and compacting with vibratory roller of 8 to 10 tonne capacity.

(c) **Laying paver blocks**: Providing and laying factory made 100mm thick Cement Concrete paver blocks (M-40 grade) over 50mm thick compacted bed of 6mm coarse aggregate and filling the joints with crusher sand.

(d) **Edge finishing of paved surface with cement concrete:** Providing and laying cement concrete of grade 1 : 1½ : 3 (1 Cement : 1½ coarse sand (zone-III): 3 graded stone aggregate 20mm nominal size) on either side of paved road.

(e) **Sign boards**: Providing retro reflective mandatory/ regulatory sign boards and cautionary/ warning sign boards.

(ii) Part-B: Re-surfacing Iyyer Road

Part-B1: Construction of new drains with electrical cable duct & data cable duct and box culverts at road crossings.

(a) **Demolition**: Demolishing/ dismantling existing RCC drains and flexible pavement.

(b) **Earthwork excavation and Bedding concrete**: Earth work excavation for new drains and laying bedding concrete with 1:3:6 cement concrete.

(c) **Concrete & steel reinforcement work**: Casting drains with cable duct using RCC 1:1.5:3 (1 cement: 1.5 coarse sand (zone-III) : 3 graded

stone aggregate 20 mm nominal size) and Fe500 and above grade reinforcement.

(d) **Box Culvert**: Construction of RCC Box Culvert using cement concrete of M25 grade.

(e) **110mm dia. PVC pipe**: Providing and laying 110mm OD PVC pipe (class 2) buried/ above ground for drainage disposal.

Part-B2: Re-surfacing road with paver blocks.

(a) **Scarifying existing metalled road surface**: This includes scarifying the metalled (Water bound) road surface and disposal of rubbish up to a lead of 50m and consolidation of the aggregates received from scarifying with power road roller of 8 to 10 tonne capacity.

(b) **WMM layer**: Providing and laying Wet Mix Macadam (WMM), including spreading and compacting graded stone aggregate with size range 53 mm to 0.075 mm to WMM specification including premixing the material with water at OMC in for all leads & lifts, laying in uniform layers with mechanical paver finisher in sub-base/ base course on well-prepared surface and compacting with vibratory roller of 8 to 10 tonne capacity.

(c) **Laying paver blocks**: Providing and laying factory made 100mm thick Cement Concrete paver blocks (M-40 grade) over 50mm thick compacted bed of 6mm coarse aggregate and filling the joints with crusher sand.

(d) **Edge finishing of paved surface with cement concrete**: Providing and laying cement concrete of grade 1 : 1½ : 3 (1 Cement : 1½ coarse sand (zone-III) derived from natural sources : 3 graded stone aggregate 20mm nominal size derived from natural sources) on either side of paved road.

(e) **Sign boards**: Providing retro reflective mandatory/ regulatory sign boards and cautionary/ warning sign boards.

3. Site conditions

3.1 Location

The site for the proposed work is at Willingdon Island. General layout drawing is enclosed as drawing 9790-01-2026 at Section -IV.

3.2 Reference Level

All the levels indicated in the drawings and/or specifications are with reference to Port Chart Datum, which is at 0.582m below Mean Sea Level. The contractor shall establish reference benchmarks at suitable spots. The maintenance of these reference benchmarks will be the responsibility of the contractor for which no payment will be made.

The tenderers shall make their own arrangements for inspecting the area and satisfying themselves regarding the water depth available in this area. However, the sounding chart in the location of the berth is enclosed for reference.

3.3 Tide and Flood Levels

The tides at Cochin are semi-diurnal with a marked daily inequality. The contractor shall carefully investigate the records of all past states of tides and flood and shall be held to have satisfied himself on all the tide and flood levels likely to prevail during the period of contract so far as it may affect the work.
The various tidal levels in the area are as indicated below for the general guidance to the tenderer.

Tide		**Levels with reference to Port Chart datum (in metres)**
Highest High Water Level	:	+1.20m
Mean High Water Spring (MHWS)	:	+0.92m
Mean Low Water Spring (MLWS)	:	+0.80m
Mean Sea Level (MSL)	:	+0.582m
Mean High Water Neap (MHWN)	:	+0.60m
Mean Low Water Neap (MLWN)	:	+0.30m
Lowest Low Water Level	:	+0.20m

3.4 Current

The maximum current expected in the inner harbour is about 0.5 metre/sec.

3.5 Wind

Wind at Cochin is highly influenced by the land and sea breezes. Wind direction changes from North-East during morning hours to west during evening for the period of October to May. During peak of South-West monsoon, especially from June to September, predominant wind direction remains South-West both during morning and evening hours.

Due to strong monsoon winds, effect of land winds is not dominant during South-West monsoon. During the non-monsoon periods, the predominant wind direction is from North East during the morning and West during the evening which shows influence of land breeze.

3.6 Rainfall

The climate is characterized by dry and wet seasons. The wet seasons starts in late May and ends in November. During this period, two monsoons pass by one after another. The major monsoon is South-West monsoon which lasts from June to September. This is followed by north-east monsoon during October and November. The average annual rainfall is about 3000mm; and the major portion is during South-West monsoon.

3.7 Temperature

Cochin experiences moderate temperatures throughout the year. The temperature varies from 22°C to 34°C. The low temperature occurs during the Southwest monsoon, December and January. Daytime temperature goes up to 30°C even during this period. The hot months are from March to May.

4. Drawings

The drawings enclosed with the tender document are to provide some idea of the job only and are preliminary and for tender purpose and are by no means complete and final and do not show the full range of the work under the scope of the contract. Work shall be carried out only on the basis of drawings marked “Issued for Construction” with addition, alteration, modifications, if any made to aforesaid drawings as required from time to time and also according to other drawings that would be supplied to the contractor from time to time

5. Time Schedule and monitoring of progress

5.1 Tenderer shall prepare and attach with the tender a detailed work schedule indicating key activities and critical items showing critical path of activities for completing the work within the stipulated contract period. This time schedule forms the basis for monitoring the progress of work. Issue of working drawings by the department will be regulated as per the time schedule approved by the department.

5.2 The contractor shall furnish to the Engineer-in-Charge weekly progress reports of the work during execution in the approved proforma indicating delay, if any, its reason and proposal to cover up the delay.

6. Facilities to be provided by the Port

6.1 Contractor's work area:

Work area as per availability near to the work site will be made available to the contractor, free of rent.

6.2 Power

Electric power required for the work will be supplied by the department from the nearest existing line of the Port at prevailing rates. The cost of drawing temporary lines/ cables/ providing switches and making connection and metering arrangements etc, shall be borne by the Contractor. If there is any disruption in the power supply due to supply failure/ restrictions imposed by the Kerala State Electricity Board, the department shall not be held responsible and the Contractor has to make suitable alternative arrangements at their cost.

7. Contractor's responsibility

7.1 All materials for use on the works shall be supplied and provided by the contractor at his own cost and shall conform to relevant BIS Specification unless otherwise specified.

7.2 Samples of all materials including fixtures, if any, to be incorporated in the work shall be got approved by the Engineer-in-Charge before procurement.

7.3 The contractor shall thoroughly study the specifications and drawings and errors/omissions/modifications, if any, shall be brought to the notice of the Engineer-in-Charge well in advance so that a final decision in the matter could be given in time.

7.4 All labour, skilled or unskilled shall be provided by the contractor. Settling any dispute with the labour will be contractor's responsibility.

7.5 The contractor shall take all care to observe no/ least disturbance to the functioning of the officers at the working places.

7.6 The contractor shall be solely responsible for any damage or injury to the persons or things caused or suffered during the execution of the work and these shall be made good or compensated at his risk & cost.

7.7 The contractor shall take all care and precautionary measures for avoiding any kind of damage/accident in the work site on any account. The department shall not entertain any claim from the contractor whatsoever towards compensation

for any damage/accidents at the site due to negligence from his part, during the execution of work.

7.8 The contractor shall prior to commencement of the work insure in the joint names of the Employer and the contractor against all loss or damage from whatever cause arising for which he is responsible under the terms of contract.

7.9 The work shall be arranged by the contractor without causing any damage to Port's/ any other structures. Any damage caused by the contractor's operation shall be compensated/ made good at contractor's risk and cost to the satisfaction of the Engineer-in-Charge of the works, failing which department will do the rectification work and the cost incurred will be recovered from any sum due to him from the Port.

7.10 All plants and equipments and consumables required for the whole work shall be provided by the contractor at his own cost.

7.11 The contractor shall not construct any structure, even of temporary nature, for any purpose at site, except with the written permission of the Engineer-in-Charge of the work and any construction so put up shall be removed by the contractor whenever the Engineer-in-Charge calls upon the contractor to do so.

7.12 The Contractor shall be responsible for the true and proper setting out of the works in relation to original points, lines and levels of reference given by the Engineer-in-charge and for the correctness of the position, levels, dimensions and alignment of all parts of the works and for the provision of all necessary instruments, appliances and labour in connection therewith. If at any time during the progress of work any error shall appear or arrive in the position, levels, dimensions or alignment of any part of the works, the contractor on being required to do so by the Engineer-in-Charge shall, at his own cost, rectify such error to the satisfaction of the Engineer-in-Charge, unless such error is based on incorrect data supplied by the Engineer-in-Charge, in which case the expense of rectifying the same shall be borne by the department. The checking of any setting out or of any line or level by the Engineer-in-charge shall not in any way relieve the contractor of his responsibility for the correctness thereof and the contractor shall carefully protect and preserve all benchmarks, pegs, other things used in setting out the work and measurement purpose.

7.13 Qualified Engineers with sufficient experience in works of similar nature as indicated in "Contract Data" shall be available at site throughout the contract period during working hours in order to receive instructions from department and to implement them properly and in time.

7.14 The contractor shall take all care and precautionary measures for avoiding damage or accidents at site. The department will not entertain any claim from

the contractor whatsoever, towards compensation for any such damage or accident occurring during the execution of the contract.

7.15 The contractor shall observe all safety regulations during the execution of the work. Safety measures, precautions, warning signals etc. shall be done at the contractor's cost as directed by the Engineer-in-charge of the work. The contractor shall provide all necessary personnel protection equipments such as helmet, lifeguard, goggles, boots etc. to the workmen at his own risk and cost. It shall be the contractor's responsibility to ensure that the workmen make use of the personnel protection equipments during the execution of work.

7.16 The work shall be arranged by the contractor without causing any hindrance to the ship and other water craft operating in the area. No damage shall be caused to the structures in the area, water crafts operating in the area or otherwise by the contractor's operations. Any damage or accident caused by the contractor's operations shall be compensated/ made good at the contractor's risk and cost.

7.17 The Contractor shall arrange to take colour photographs throughout the works for the purposes of recording the overall progress of the works and recording details of each aspect of the Works or as otherwise directed by the Employer. The photographs shall be of acceptable quality and shall be taken by a professionally competent person with a digital camera having resolution in excess of 10 Megapixels and able to record the date of photographs taken in the prints. Salient activities and corresponding photography pertaining to work progress are to be attached to the corresponding monthly progress reports. Further, the Contractor shall arrange for videography (HD quality) of important events of the Works or as otherwise directed by the Employer.

7.18 The Contractor shall submit at his own cost monthly or at intervals as directed by the Engineer-in-Charge well executed photographs of standard size (Appro. 24 x 18 cm) showing the progress of the work and also such other particular item of work. The contractor shall provide hard copy prints of selected photographs in albums of acceptable quality. Electronic files suitable for attachment to e mails shall also be submitted. Each photograph in the album shall be suitably captioned and the electronic files appropriately named.

7.19 No information or photograph concerning the works shall be published without the prior permission of the Chief Engineer and drafts of all such proposal/ publication shall be submitted for approval.

7.20 The information and data shown in the drawing and detailed elsewhere in the tender document are furnished for general information and guidance only and the Port Authority in no case will be held responsible for the strict accuracy thereof or any deduction, interpretation or conclusion drawn by the tenderer.

7.21 The contractor shall observe the conservancy rules relating to the Port and shall always take necessary steps to keep the Port water free of noxious or unhygienic matter due to the work, as are required by the Engineer-in-Charge. Under no circumstances, inflammable materials are allowed to spill into Port waters.

7.22 The Cochin Port is an International Ship & Port Facility Security (ISPS) code compliant Port and the contractor is obliged to comply with the provisions of the code in force and as amended from time to time.

7.23 The contractor will have to provide a site office accommodation using air conditioned container of approx. size 6.0m x 2.4m x 2.4m(min.) with 3 cabins & one toilet on 30cm high raised platform and all around concrete hard-standing near the contractor's work area or other location as approved by the Engineer-in-charge, for the use of departmental staff, within 30 days of the work order which shall be maintained till completion of work with the following facilities as per detailed specifications and directions of Engineer-in-charge. Arrangements for fresh water supply and power supply to the office building shall be made by the contractor. Necessary fans and lights shall be provided.

The following minimum facilities shall be provided in the site office accommodation.

Sl. No.	Item Details	No.
(i)	Office Tables	2 Nos.
(ii)	Office chair	2 Nos.
(iii)	Visitors chair	4 Nos.
(iv)	Fan	As required

7.24 No separate payment shall be made for providing the office as said above and it shall be included in the rate quoted for the work. In case the contractor fails to hand over the furnished office within the above period and/ or fails to maintain the office for the stipulated period, an amount of Rs.50,000/- per month or part thereof shall be deducted from the contractor's running bills, for the period of delay/ lapse. In case the contractor is proposed to provide Porta cabins for site office accommodation it shall be air-conditioned. On completion of the work, the office accommodation provided by the contractor shall be disposed off by the contractor.

7.25 The contractor shall provide necessary arrangements as desired by the Engineer-in-Charge for inspection of work without any extra cost from commencement till completion of work.

7.26 The Contractor shall ensure that no labourers with criminal background are engaged for the work.

7.27 All fossils, coins, articles of value or antiques and structures and other remains or things of geological or archaeological interest discovered in the site of work shall be deemed to be the absolute property of the Cochin Port Authority and the contractor shall take responsible precautions to prevent his workmen or any other persons from removing or damaging any such article or thing and shall immediately upon discovery thereof and before removal, acquaint the departmental officers of such recovery and carry out at the expense of the department, the Engineer-in-Charge's orders as to the disposal of the same.

7.28 The contractor shall remove any plant (floating or otherwise) belonging to him or to any person employed by him which might have sunk in the course of work or otherwise deal with the same as directed by the Engineer-in-Charge and until the same is raised and removed, the contractor shall set on such buoys and display at night such lights for avoiding any mishaps.

7.29 Water required for the construction works including curing work shall be arranged by the contractor at his own cost.

7.30 The contractor shall take all precautions for not to damage any cables/pipes etc. passing through the area of work. Damages, if any, caused to electrical cables/ water lines/ telephone lines shall be rectified by the Contractor at his cost and risk.

7.31 The contractor shall remove all materials brought to work site/ stacked at the work site or anywhere else within the Port area and clear the site at his cost to the full satisfaction of the Engineer-in-Charge before the site is returned to the Port Authority. All such materials including debris, tools & plants etc. shall be disposed off to any place as pointed out by the Engineer-in-Charge or be taken away from the location and shall be cleared in every respect and to reinstate to its original condition at no extra cost to the Port Authority immediately after completion of the work. In case, any such material is found left in the work site or anywhere in the Port area, rent for the storage space occupied by the contractor, either for stacking the materials/debris or for areas used for such purpose but not cleared thereafter, will be recovered as per the prevailing Scale of Rate of Cochin Port Authority, for the rent applicable for open storage space for commercial purpose, for the period for which the area had been occupied by the contractor. In addition to the above, in case the Port requires the area immediately for its use, Port will repossess the land after restoring it to its original condition, material will be confiscated and disposed off at the risk and cost of the contractor, after issuing two notices giving 15 days' time each for removing the material. All expenses incurred on this shall be recovered by disposing off the material if any confiscated. If any balance amount still remains to be realized that will be recovered from the contractor by appropriate means.

7.32 The contractor shall extend all the facilitations and cooperation for other contractors for simultaneous execution of other works in the area entrusted by Cochin Port Authority.

7.33 The contractor shall comply with all the provisions of the Indian Workmen's Compensations Act, Provident Fund Regulations, Employees Provident Fund and ESI Act etc. amended from time to time and rules framed there under and other laws affecting the contract labour that may be brought in to force from time to time.

7.34 The contractor shall be registered under EPF and ESI Act and the employees employed under them shall be covered in the EPF and ESI scheme. Work Order shall be issued only to the contractors who are registered under EPF organization and ESI Corporation. The contractors shall regularly remit the employer and employee contribution to the authorities. If not, the Department would remit the same and the amount so remitted shall be deducted from the part/final bill of contractors.

7.35 The contractor shall provide, at every work place, at which 20 or more women workers are ordinarily employed, crèches of reasonable size and with adequate facility for the use of their children under at the age of six years at his risk and cost.

8. Workmanship

8.1. All the works shall be done strictly according to relevant B.I.S. specifications unless otherwise specified.

8.2. The whole work shall be completed in a diligent manner within the contract period and defect or imperfection if any, observed during the defect liability period/ guarantee period, shall be rectified at contractor's cost to the full satisfaction of the Engineer-in-Charge within the time allowed.

8.3. **The work shall be arranged in the order of preference as directed by the Engineer-in-Charge of work. In addition to above, contractor shall submit a Quality Assurance Plan (QAP) for the entire works under this contract and it shall be approved by the Engineer-in-Charge before commencing the work and shall be ensured strict compliance of the same. The QAP shall contain the details of tests to be conducted for each material to be used in the work and work.**

9. Temporary works

9.1 All scaffolding, staging, bracing and other temporary works required for proper execution of the works, shall be provided by the contractor at his own cost, unless stated otherwise and that should be inclusive of all materials, labour,

supervision and other facilities. The layout and details of such temporary works shall have prior approval of the Engineer-in-Charge, but the contractor shall be responsible for proper strength and safety of the same. All temporary works shall be so constructed as not to interfere with any permanent work or with the work of other agencies. If it is necessary to remove any of the temporary works at any time to facilitate execution of works or work by other agencies, such removal and re erection, if required, shall be carried out by the Contractor at the direction of Engineer-in-Charge without any delay and any extra cost on this account shall be borne by the contractor.

9.2 On completion of the works, temporary works if any provided by the contractor shall be removed from the site and the area shall be reinstated to the original condition at his own risk and cost.

10. Time For Completion

10.1. The time allowed for carrying out the work as mentioned in the Memorandum shall be strictly observed by the contractor. The work shall throughout the time period be proceeded with diligence, time being deemed to be the essence of the contract.

10.2. The completion of work may entail working in monsoon period/rainy season without any extra cost. The contractor shall take such an eventuality into consideration while quoting for the work. Normally, no extension of time will be admissible for work in monsoon.

10.3. The whole work shall be completed in the stipulated time, accordance with the provisions under Memorandum included under “Form of Tender” or such extended time as may be allowed under clause 29 of Conditions of Contract included in the GCC.

11. Working time

11.1 The normal working time of the Port is from 8 A.M. to 4.00 P.M. on all working days. If the Contractor wishes to carry out the work beyond normal working hours and or on holidays, he should get specific approval from the Engineer-in-Charge for the same. Necessary supervision will be arranged by the department and the expenditure to be incurred in this connection will be borne by the department.

12. Method of Execution

12.1 The contractor shall clearly indicate in their tender as per ***Annexure-6,*** the method proposed by them for executing the various items of works. During the

actual execution of the works if modifications or changes in the method of execution of work are found necessary the contractor shall obtain approval from the Engineer-in-charge of work for such modifications or changes in the method. No claim from the contractor for additional payment shall be entertained by the department on the above account.

12.2 The detailed list of equipment/machineries/tools & plants proposed to be mobilized for the deployment in the work as furnished as per ***Annexure-7*** of **Section- I** and method of execution furnished under clause above, are considered only for the technical appreciation of the proposal of the contractors and it shall not relieve the contractor of his responsibility of executing the work with the quality specified in the tender and any discrepancy occurs, the construction procedures detailed/specified in the tender will prevail. In case, any additional equipment is required to be mobilized than those listed in the tender for deployment in the work, it shall be arranged and the work executed as per the tender specifications without any extra cost to the Department.

13. Alterations and Additions

13.1 The Employer shall have power and authority from time to time and at all times to make amendments or additions or alternations or changes in the scope of the work, and specifications, drawings and bill of quantities and give such further instructions and directions as may appear to the Employer necessary and proper for the guidance of the Contractor and the good and efficient execution of the works and the contractor shall receive, obey and be bound by the same according to the true intent and meaning thereof as if the same had been mentioned or referred to in the scope of the work, specifications, Bill of Quantities and Schedules and drawings. The Employer may also vary or alter the lines, levels or positions of any of the works contemplated or may order any of the works contemplated thereby to be omitted, with or without the substitution of any other works in lieu thereof, or may order any work or any portion of works executed or partially executed to be removed, changed or altered, if required, and may order that other work shall be substituted in lieu thereof and any difference in the cost occasioned by any such diminution or alteration so ordered and directed shall be added to or deducted from the Contract Price based on rates available in the contract or where the rates are not specified a suitable rate backed up by rate analysis shall be submitted by the contractor and agreed upon between the contractor and the Employer. In the event of disagreement, the Employer shall fix such rates or prices as shall in their opinion, be reasonable and proper having regard to the circumstances. The contractor shall give to the Employer before the tenth day of every month, a statement in writing of any extra work which he may have performed during the preceding month,

failing which any claim for which he may afterwards make for payment on account of any such extra work will not be allowed.

14. Site handing over in stages:

14.1 The work shall be executed in phases so as to ensue uninterrupted movement of traffic through the work area. The contractor shall initially take up and complete the works in one half portion of the road/work area as directed by the Engineer-in-charge, while the remaining half portion shall be kept available and maintained for the movement of traffic.

The contractor shall make all necessary arrangements for the safe and uninterrupted movement of vehicular traffic through the portion kept open to traffic including provision of suitable barricading, traffic signs, warning lights, diversion arrangements as directed by the Engineer-in-charge,

---

SECTION -III
COCHIN PORT AUTHORITY

2. SPECIAL CONDITIONS OF CONTRACT

Sl. No.	Description	Page No.
1	General	164
2	Rates for Various Items	164
3	Works Executed Through Subletting	165
4	Measurements of Work Done	165-167
5	Liquidated Damages	167
6	Advance	167
7	Care of Works	167
8	Excepted Risks	167-168
9	Payments of Salary / Wages and Other Benefits etc. to Contract / Casual Workers	168
10	Modifications to GCC	168-176

SECTION -III
COCHIN PORT AUTHORITY

2. SPECIAL CONDITIONS OF CONTRACT

1. GENERAL

1.1 Special Conditions shall be read in conjunction with the General Conditions of Contract, Specifications, Drawings and any other document forming part of this Contract wherever the context so requires.

1.2 Notwithstanding the Sub-division of the documents into these separate section and volume every part of each shall be deemed to be supplementary to and complementary of every other part and shall be read with and into the Contract so far as it may be practicable to do so.

1.3 Where any portion of the General Conditions of Contract is repugnant to or at variance with any provision of the Special Conditions, the provisions of the Special Conditions shall be deemed to over-ride the provisions of the General Conditions of Contract and shall to the extent of such repugnancy of variations, prevail.

2. RATES FOR VARIOUS ITEMS

2.1 The percentage as applicable shall except in so far as the contract otherwise provides, cover all obligations of the contractor under this contract and all matters and things necessary for the proper completion and maintenance of the works. The percentage quoted for the work shall be all inclusive value of the finished work as per drawings and specifications and shall cover the cost of all constructional plants, temporary works, appliances, materials, both for the works and temporary works, labour and all other matter in connection with each item quoted for and shall be in multiples of ten paise.

2.2 The contractor shall be deemed to have satisfied himself before tendering as to the correctness and sufficiency of his tender for the works and of the rates and prices stated in the Schedule of Quantities.

2.3 The contractor’s rates and prices shall include all taxes, duties and fees including Port charges like wharfage, Port dues, berth hire, pilotage etc. if any applicable, all charges and taxes whatsoever excluding Goods and Service Tax (GST) in respect of materials, labour and plant and all other things obtained or used by the contractor for the execution and maintenance of the works or any temporary works.

3. WORKS EXECUTED THROUGH SUBLETTING

3.1 The contractor may sublet any portion of the contract, as per clause 8 of Conditions of Contract of GCC.

3.2 Notwithstanding any subletting with such approval as required under above and notwithstanding that the Engineer-in-Charge shall have received copies of any sub-contract, the contractor shall be solely responsible for the quality and proper execution of the works, performance of all conditions of contract in all respects as if such subletting had not taken place and as if such work has been done directly by the contractor.

3.3 If any sub-contractor engaged upon the works at the site executes, any work which, in the opinion of the Engineer-in-Charge, is not in accordance with the contract condition, written notice may be given to the contractor requesting him to terminate such sub contract and the contractor upon receipt of such notice shall terminate such sub contract and the said sub-contractor shall forthwith leave the works, failing which the department shall have right to remove such sub-contractors from site. No action taken by the department under this clause shall relieve the contractor of any of his liabilities under the contract or give rise to any compensation, extension of time or otherwise.

4. MEASUREMENTS OF WORK DONE

4.1 In addition to the Clause-26 of GCC- 'Computerized Measurement Book', measurement of the work can also be done as detailed below

4.2 Dy. Chief Engineer/ Superintending Engineer/ Executive Engineer (hereinafter called the Engineer's Nominee) shall, except as otherwise provided, ascertain and determine by measurement the value in accordance with the Contract of work done.

4.3 All measurement of all items having financial value shall be entered in Measurement Book and/or level field book so that a complete record is obtained of all works performed under the Contract.

4.4 All measurements and levels shall be taken jointly by the Engineer's Nominee or his authorized representative and by the Contractor or his authorized representative from time to time during the progress of the work and such measurements shall be signed and dated by the Engineer's Nominee and the Contractor or their representatives in token of their acceptance. If the Contractor objects to any of the measurements recorded, a note shall be made to that effect with reason and signed by both the parties.

4.5 Department shall not entertain any claim from Contractor for any loss or damages on this account. If the Contractor or his authorized representative does not remain present at the time of such measurements after the Contractor or his authorized representative has been given a notice in writing three (3) days in advance or fails to countersign or to record objection within a week from the date of the measurement, then such measurements recorded in his absence by the Engineer’s Nominee or his representative shall be deemed to be accepted by the Contractor.

4.6 The Contractor shall, without extra charge, provide all assistance with every appliance, labour and other things necessary for measurements and recording levels.

4.7 Except where any general or detailed description of the work expressly shows to the contrary, measurements shall be taken in accordance with the procedure set forth in the specifications notwithstanding any provision in the relevant Standard Method of measurement or any general or local custom. In the case of items which are not covered by specifications, measurements shall be taken in accordance with the relevant standard method of measurement issued by the Bureau of Indian Standards and if for any item no such standard is available then a mutually agreed method shall be followed.

4.8 The Contractor shall give not less than seven days' notice to the Engineer’s Nominee or his authorized representative in charge of the work before covering up or otherwise placing beyond the reach of measurement any work in order that the same may be measured and correct dimensions thereof be taken before the same is covered up or placed beyond the reach of measurement and shall not cover up and place beyond reach of measurement any work without consent in writing of the Engineer’s Nominee or his authorized representative in charge of the work who shall within the aforesaid period of seven days inspect the work, and if any work shall be covered up or placed beyond the reach of measurements without such notice having been given or the Engineer’s Nominee's consent being obtained in writing the same shall be uncovered at the Contractor's expense, or in default thereof no payment or allowance shall be made for such work or the materials with which the same was executed.

4.9 Engineer’s Nominee or his authorized representative may cause either themselves or through another officer of the department to check the measurements recorded jointly or otherwise as aforesaid and all provisions stipulated herein above shall be applicable to such checking of measurements or levels.

4.10 It is also a term of this Contract that recording of measurements of any item of work in the measurement book and/or its payment in the interim, on account or final bill shall not be considered as conclusive evidence as to the sufficiency of any work or material to which it relates nor shall it relieve the Contractor from liabilities from any over measurement or defects noticed till completion of the defect liability period.

5. LIQUDATED DAMAGES

For levying compensation as per Clause-49 of General Conditions of Contract, the employer is not required to have documentary evidence to quantify or prove the losses suffered by the Employer due to delay in completion of work by the contractor, as per agreement conditions.

6. ADVANCE

The Mobilization Advance shall be as per clause 51 of General Conditions of Contract. Secured Advance shall be given for non - perishable materials as provided in clause 51.6 of General Conditions of Contract. Cement is not considered as a non - perishable item. However, sand will be considered for payment of secured advance.

7. CARE OF WORKS

From the commencement to the completion of the work the contractor shall take full responsibility for the care of the work and his employees in connection with the work thereof and in case any damage, loss or injury shall happen to the works or any part thereof or to any temporary work from any cause whatsoever (save and except the excepted risks as defined in clause 8 given below shall at his own cost repair and make good the same so that the work shall be completed in good order and in conformity in every respect with requirement of the contract. In the event of any such damage, loss or injury happening from any of the excepted risks, the Contractor shall if and to the extent required by the Engineer-in-Charge, make good the same as aforesaid and it will be to the account of the Board.

8. EXCEPTED RISKS

The excepted risks are riot (in so far as it is uninsurable) war, invasion, act of foreign enemies, hostilities (whether war be declared or not), civil war, rebellion, revolution, insurrection or military usurped power or a cause solely due to use of occupation by the Board of any portion of the work, any operation of the forces of nature that the contractor could not have foreseen or

reasonably provided against. (All of such are herein collectively referred to as the excepted risks).

9. PAYMENTS OF SALARY/ WAGES AND OTHER BENEFITS etc. TO CONTRACT/ CASUAL WORKERS

9.1 **The Contractors shall make all payments of salary/wages and other benefits etc. to the contract/ casual workers deployed for the work through Bank/ Cheque only.**

9.2 **All the payments to the contractors would be released only on submission of undertaking to comply with the clause 9.1 above.**

10. MODIFICATIONS TO GCC

The following clauses of General Conditions of Contract (GCC) shall be replaced and modified as below.

1. DEFINITIONS

(Following Definitions shall be replaced as)

The **Completion Date** is the date of completion of the Works as certified by the Engineer or his nominee in accordance with Sub Clause **56.1**of GCC.

Market Rate is the rate as decided by the Engineer on the basis of the cost of materials and labour at the site where the work is to be executed plus **15%** to cover all overheads and profits.

Clause 2.3 shall be replaced as:

The documents forming the Contract shall be interpreted in the following order of priority:

(1) Agreement
(2) Letter of Acceptance and notice to proceed with works
(3) Bill of quantities
(4) Contractor's Bid
(5) Contract Data
(6) Special Conditions of Contract
(7) General Conditions of Contract
(8) Specifications
(9) Drawings and
(10) Any other documents listed in the Contract Data as forming part of the Contract.

25. SETTLEMENT OF DISPUTES AND ARBITRATION

(Clauses 25 shall be replaced as)

DISPUTE RESOLUTION

25.1. The Parties agree to use their best efforts for amicably resolving all Disputes arising under or in respect of this Agreement by mutual discussions.

25.2. Except where otherwise provided in the contract all questions and disputes relating to the meaning of the specifications, design, drawings and instructions here-in before mentioned and as to the quality of workmanship or materials used on the work or as to any other question, claim, right, matter or thing whatsoever in any way arising out of or relating to the contract, designs, drawings, specifications, estimates, instructions, orders or these conditions or otherwise concerning the works or the execution or failure to execute the same whether arising during the progress of the work or after the cancellation, termination, completion or abandonment thereof shall be dealt with as mentioned hereinafter:-

(iii) If the Contractor considers any work demanded of him to be outside the requirements of the contract, or disputes any drawings, record or decision given in writing by the Engineer-in-charge on any matter in connection with or arising out of the contract or carrying out of the work, to be unacceptable, he shall promptly within 15 days request the Engineer in writing for written instruction or decision. Thereupon, the Engineer shall give his written instructions or decision within 30 days of receipt of the Contractor's letter.

(iv) If the Engineer fails to give his instructions or decision in writing within the aforesaid period or if the Contractor is dissatisfied with the instructions or decision of the Engineer, the Contractor may, within 15 days of the receipt of Engineer's decision, appeal to the Chairperson who shall afford an opportunity to the Contractor to be heard, if the latter so desires, and to offer evidence in support of his appeal. The Chairperson shall give his decision within 30 days of receipt of Contractor's appeal.

(v) If the Contractor is dissatisfied with this decision, the Contractor shall within a period of 30 days from receipt of the said decision, shall take further action in accordance with the conciliation procedure set forth in Clause 25.3.

25.3. Conciliation

In the event of any dispute or differences between the parties which could not be resolved amicably, the Chairperson of Cochin Port Authority may refer such unresolved disputes or differences to a Conciliation Committee comprising of independent subject experts, set up by the Port Authority to enable speedy disposal of pending/ new cases. The conciliation proceedings shall be subject to guidelines in this regard, issued by the Port Authority from time to time. Recourse to such Conciliation shall also be open before, during or after the arbitration or litigation proceedings. The award of the Conciliation Committee, if agreed by both the Parties, shall then be placed for consideration of the Board of the Port Authority subject to the Delegation of Powers.

25.4. Arbitration

(i) Any disputes of a total value less than Rs. 10 crores shall be resolved through arbitration by a Sole Arbitrator appointed by mutual consent of the parties.

(ii) Either party shall within a period of 30 days from the date of termination of conciliation proceedings, give notice to other party for appointment of arbitrator.

(iii) If the arbitrator so appointed is unable or unwilling to act or resigns his appointment or vacates his office due to any reason whatsoever another sole arbitrator shall be appointed jointly by both parties. Such person shall be entitled to proceed with the reference from the stage at which it was left by his predecessor.

(iv) It is a term of this contract that the party invoking arbitration shall give a list of disputes with amounts claimed in respect of each such dispute along with the notice for appointment of arbitrator and giving reference to the rejection by the Chairperson of the appeal.

(v) It is also a term of this contract that if the Contractor does not make any demand for appointment of arbitrator in respect of any claims in writing as aforesaid within 120 days of receiving the intimation from the Engineer that the final bill is ready for payment, any claim of the Contractor shall be deemed to have been abandoned and absolutely barred and the Employer or his authorized representative shall be discharged and released of all liabilities under the contract in respect of these claims.

(vi) The arbitration shall be conducted in accordance with the provisions of

the Arbitration and Conciliation Act, 1996 (26 of 1996) or any statutory modifications or re-enactment thereof and the rules made there under and for the time being in force shall apply to the arbitration proceeding under this clause.

(vii) It is also a term of this contract that the Arbitrator/ Arbitral Tribunal shall adjudicate only on such disputes as are referred to him and give separate award against each dispute and claim referred to.

(viii) It is also a term of the contract that if any fees are payable to the arbitrator the same shall be paid equally by both the parties.

(ix) It is also a term of the contract that the arbitrator shall be deemed to have entered on the reference on the date he/ they issues notice to both the parties calling them to submit their statement of claims and counter statement of claims.

(x) The seat and venue of the arbitration shall be at Cochin.

(xi) The fees, if any, of the arbitrator shall, if required to be paid before the award is made and published, be paid half and half by each of the parties. The cost of the reference and of the award (including the fees, if any, of the arbitrator) shall be in the discretion of the arbitrator who may direct to any party by whom and in what manner, such costs or any part thereof shall be paid.

25.5. Litigation

(i) Any disputes of total value above Rs. 10 crores not covered in the aforesaid arbitration clause shall be adjudicated by the courts.

(ii) Only Courts in Cochin alone shall have jurisdiction to adjudicate any disputes between the parties.

25.6. Administrative Mechanism for Resolution of CPSEs Disputes (AMRCD)

Notwithstanding anything contained above, in the event of any dispute or difference relating to the interpretation and application of the provisions of commercial contracts between Central Public Sector Enterprises (CPSEs/ Port Authorities inter se and also between CPSEs and Government Departments/ Organizations, such dispute or difference shall be taken up by either party for resolution through AMRCD as mentioned in DPE OM No. 4(1)/2013-DPE(GM)/FTS-1835 dated 22/05/2018.

26. COMPUTERIZED MEASUREMENT BOOK

(6th para shall be replaced as)

The Contractor shall also submit to the department separately his computerized Abstract of Cost and the bill based on these measurements, duly bound, and its pages machine numbered along with **three** spare copies of the bill. Thereafter, this bill will be processed by the Division Office and allotted a number as per the computerized record in the same way as done for the measurement book meant for measurements

40. PAYMENTS FOR VARIATIONS

(Clauses 40.2 and 40.3 shall be replaced as)

40.2 For items not existing in the Bill of Quantities or substitution to items in the Bill of Quantities, rate payable should be determined by methods given below and, in the order, given below:

(i) Rates and prices derived from the rate of similar items in Contract.

(ii) Rates and prices in the Schedule of Rates applicable to the Contract plus Ruling percentage.

(iii) Market rates of materials and labour, hire charges of plant and machinery used, plus **15%** for overheads and profits of Contractor.

40.3 For items in the Bill of Quantities but where quantities have increased beyond the variation limits, the rate payable for quantity in excess of the quantity in the Bill of Quantity plus the permissible variation shall be as determined by methods given below:

(i) Rates and prices in the Schedule of Rates applicable to the Contract plus Ruling percentage.

(ii) Market rates of mater 15% for overheads and profits of Contractor. whichever is lower, but not less than the rate in the Bill of Quantities

43. PAYMENTS

(Clause 43.1 shall be replaced as)

43.1 Bills shall be prepared and submitted by the Contractor. Joint measurements shall be taken continuously and need not be connected with billing stage. System of 4 copies of measurements, one each for Contractor, Employer and Engineer or his nominee, and signed by both Contractor and Engineer or his nominee shall be followed.

44. COMPENSATION EVENTS

44.1 (c) to (e) - Deleted.

45. RATES FOR ITEMS TO BE INCLUSIVE OF TAXES

45.1 The rate quoted by the Contractor shall be inclusive of the cost of provision of plant and equipment, materials, labour, execution, supervision, maintenance, overheads and profits and every incidental and contingent cost and charges whatsoever excluding Goods and Service Tax (GST). GST as may be applicable from time to time shall be shown separately in the invoice. The Employer will perform such duties in regard to the deduction of such taxes at sources as per applicable law. Any new Taxes, levies, duties imposed after signing the Contract shall be reimbursed by the Employer on production of documentary evidence.

45.2 The invoice to be submitted by the Contractor should include the GST Registration Number of the Contractor as well as the Employer.

48. RETENTION

(Clause **48.2** shall be replaced as).

48.2 Retention Money shall be deducted at 5% of the gross amount of the bill from the first Running Account bill onwards till the recovered sum amounts to 5% of the contract value or the value of the work done whichever is higher. Retention money shall be refunded to the Contractor within 14days from the date of payment of final bill.

48 & 52 RETENTION MONEY AND SECURITY DEPOSIT

The Clauses 48 and 52 of the General Conditions of Contract related to the Retention Money and Security Deposit, stands modified to the extent detailed below:

(i) In all cases, the Performance Guarantee retained till end of Defect Liability Period shall be 5 % of the Contract Value or Cost of Work Done, whichever is higher.

(ii) Wherever the cost of work done exceeds the contract value, the total amount retained as Security deposit, considering the Performance Guarantee initially submitted together with the Retention Money recovered from the running accounts bills, shall amount to 10 % of the Cost of Work Done, at all times.

(iii) In such cases, while releasing the retention money after payment of Final Bill as per the contract conditions, care shall be taken that only 5 % of the Cost of Work Done is released, instead of the entire

retention money recovered from the bills. The balance amount shall be retained to make up for the shortage in the Performance Guarantee and shall be released along with the Performance Guarantee, upon completion of the Defects Liability Period.

51. ADVANCE PAYMENT

(Clauses 51.3 shall be replaced as)

51.3 Mobilization Advance and Construction Equipment Advance shall be paid at **SBI MCLR + 2%**interest rate per annum and shall be made in two equal instalments and against Bank Guarantee for Mobilization Advance and against hypothecation of Construction Equipment to the Employer.

52. SECURITIES

(Clauses 52.2 shall be replaced as)

52.2 Performance Security shall 5% of the Contract value.

New Sub Clause under 52.3 shall be added as follows.

iii) Insurance Security Bond drawn in favour of the FA & CAO, CoPA from the Insurance Company duly approved by the Insurance Regulatory and Development Authority of India.

67. INSURANCE OF WORKS

67.1 Without limiting his obligations and responsibilities, under Clause 67 hereof, the Contractor shall prior to commencement of the works insure in the joint names of the Employer and the Contractor against all loss or damage from whatever cause arising, other than the expected risks for which he is responsible under the terms of the Contract and in such manner that the Employer and Contractor are covered for the period stipulated in Clause 10 Hereof and are also covered during the period of maintenance and for any loss or damage occasioned by the contractor in the clause of any operations carried out by him for the purpose of complying with his obligations under Clause 36 of Conditions of Contract of GCC.

67.2 The insurance cover shall be for;

(a) The works for the time being executed to the estimated current contract value thereof plus 10 (ten) percent thereon to allow for any additional costs and professional fee resulting from the loss or damage.

(b) The constructional plant and other things brought on to the site by the Contractor to the replacement value of such constructional plant and other things.

(c) Compensation to be payable to currencies needed to cover the loss or damage incurred.

67.3 It shall be the responsibility of the Contractor to notify the insurer of any change in the nature and extent of the works and to ensure the adequacy of the insurance cover at all times in accordance with the provisions of this clause.

82. TAXES AND DUTIES

82.1 **-Deleted**

82.2 **-Deleted**

82.3 **Income Tax**

The Contractor and his staff shall be responsible for payment of all personal income taxes to the concerned authorities as per the law in force from time to time. Deduction of Income Tax shall be made by the Employer from each certificate of payment to the Contractor made as per prevailing rates. TDS under GST law shall also be deducted as per prevailing rates.

82.4 The Contractor shall comply all the GST Regulations viz. timely uploading of bills, issue of debit/ credit notes etc.

G. Salient Features of Some Major Laws Applicable To Establishments Engaged in Construction Work.

(Clauses [d] & [l(i)] shall be replaced as)

(d) Maternity Benefit Act 1961 or Maternity Benefit Amendment Act 2017:- The Acts provides for leave and some other benefits to workmen/ employees in case of confinement or miscarriage etc.

(l) ESI Act, 1948:-

(i) As per the Govt. Notification dt. 20/07/2009, Cochin Port Authority has registered under the ESI Act with ESI Corporation and provision of ESI Act, 1948 are applicable to contract/casual employees drawing wages/Salary upto **Rs.20,000/-** per month and working in Cochin Port Authority. Workers covered under ESI Act, are entitled for full medical care for self and family. Besides, cash benefit in the event of sickness, maternity and employment injury. Accordingly, the contractual/casual

employees drawing wages upto**Rs.20,000/-** per month employed either directly by Port Authority or through contractor are covered under ESI Act, 1948. It is obligatory on the part of the employer to calculate and remit ESI contribution comprising of employers' share of 4.75% plus employees' share of 1.75% which is payable on or before 21st of the following month, to which the salary relates.

SECTION - IV

COCHIN PORT AUTHORITY
CIVIL ENGINEERING DEPARTMENT

Tender No: T10/T-2117/2026-C

Tender for

RECONSTRUCTION OF MARAR ROAD AND G. V. IYYER ROAD WITH CC PAVER BLOCKS, RCC DRAINS, BOX CULVERTS, UTILITY DUCTS, ETC., AT W/ISLAND

INDEX
SECTION -IV TECHNICAL SPECIFICATIONS

Clause/ Sections	Description	Page No.
1.1	Detailed Specification for Materials to be used for Work	180-188
1.1.1	General	180
1.1.2	Aggregates for Concrete	180-181
1.1.3	Cement	181-182
1.1.4	Steel Reinforcement	182-183
1.1.5	Water	183-184
1.1.6	Admixtures in Concrete	184
1.1.7	Cement Concrete Pa3.ver Blocks	184
1.1.8	P.V.C Pipes (For Drainage Lines)	184
1.1.9	6mm size Aggregate	184
1.1.10	Materials for Wet Mix Macadam	184-186
1.1.11	Retro Reflective Sign Boards	186-188
1.1.12	Materials not Specified	188
1.1.13	Sampling and Testing of Materials	188
1.2	Detailed Specifications for Items of Civil Works	189-204
1.2.1	General	189
1.2.2	Dismantling and Demolishing Works	189-190
1.2.3	Earthwork Excavation	190-191
1.2.4	Supplying and Stacking Red Earth	191
1.2.5	Plain and Reinforced Cement Concrete	191-196

Clause/ Sections	Description	Page No.
1.2.6	Scarifying Existing WBM Road Surface	196-197
1.2.7	Providing Wet Mix Macadam Base (WMM)	197-201
1.2.8	Providing and Laying Cement Concrete Paver Blocks	201
1.2.9	Retro Reflective Sign Boards	201-204
1.2.10	Approved makes	204

SECTION –IV

COCHIN PORT AUTHORITY

1. TECHNICAL SPECIFICATIONS

1.1. DETAILED SPECIFICATIONS FOR MATERIALS TO BE USED FOR CIVIL WORKS

1.1.1. GENERAL

1.1.1.1. Except where otherwise specified or authorised by the Engineer-in-Charge, materials supplied by the contractor shall conform to the latest edition of code of practices published by the Bureau of Indian Standard. Samples of materials to be supplied by the contractor shall be shown to the Engineer-in-Charge sufficiently in advance for approval of its quality for use on the work.

1.1.1.2. All the materials to be used on the works shall have BIS certification mark if so available, unless otherwise specified elsewhere or shall be of approved brand with equivalent material as approved by the Engineer-in-Charge. List of approved materials/ makes are indicated in Clause 14of this section.

1.1.1.3. All materials supplied shall be stored appropriately to prevent deterioration/ damage from any cause what so ever and to the entire satisfaction of the Engineer-in Charge.

1.1.1.4. The materials required for the work shall be brought to the site and stacked at places shown by the Engineer-in-Charge and the same shall be got approved for use in work sufficiently in advance so that the progress of the work is not affected by the supply of materials.

1.1.1.5. Tolls are payable by the contractor as per rules for vehicles using the Port's roads for supplying the materials.

1.1.2. AGGREGATES FOR CONCRETE

1.1.2.1. Aggregates (fine and coarse) for concrete shall comply with the requirements of IS: 383 – 'Specifications for coarse and fine aggregate from natural sources for concrete'. Aggregate shall be obtained from sources approved by the Engineer-in-Charge. Aggregates, which are not perfectly clean, shall be washed in clean water to the entire satisfaction of the Engineer-in-Charge.

1.1.2.2. The fine aggregate shall be clean, hard, durable, uncoated, dry and free from injurious, soft or flaky pieces and organic or other deleterious substances.

1.1.2.3. Each type of aggregate shall be stored separately for the approval of Engineer-in-Charge. Wet aggregate delivered at the site shall be kept in storage for at least 24 hours to ensure adequate drainage before being used for concreting.

1.1.2.4. Contractor shall maintain at site at all times such quantities of each type of aggregate as are considered by the Engineer-in-Charge to be sufficient to ensure continuity of work.

1.1.3. CEMENT

1.1.3.1. Quality of cement used for the work shall be 43 grade ordinary Portland cement conforming to IS:8112 or 53 grade ordinary Portland cement conforming to IS:12269 or Pozzolona cement conforming to I.S. 1489 unless otherwise approved by the Engineer-in-Charge. The cement required for the work will have to be procured by the contractor and shall comply with the relevant IS. As far as possible, the cement required for the work will have to be procured from the government agencies. The cement shall, if required by the Chief Engineer/ Engineer-in-Charge, be tested and analysed by an independent analyst at the Contractor's cost and result produced to the Engineer-in-Charge.

1.1.3.2. Supply of cement shall be taken in 50kg bags bearing manufacture's name and BIS marking. Samples of cement arranged by the contractor shall be taken by the Engineer-in-Charge and got tested in accordance with provisions of relevant BIS codes. In case, test results indicate that the cement arranged by the Contractor does not conform to the relevant BIS codes, the same shall stand rejected and shall be removed from the site by the contractor at his own cost within a week's time of written order from the Engineer-in-Charge to do so.

1.1.3.3. A cement godown of adequate capacity as directed by the Engineer-in-Charge shall be constructed by the contractors at the site of the work for which no extra payment shall be made. Double lock provision shall be made to the door of the cement godown. The key of one lock shall remain with the Engineer-in-Charge or his authorized representative and the key of the other lock shall remain with the contractor. The contractor shall be responsible for the watch and ward and safety of the cement godown. The

contractor shall facilitate the inspection of the cement godown by the Engineer-in-Charge.

1.1.3.4. The cement brought to the site and cement remaining unused after completion of work shall not be removed from the site without written permission from/of the Engineer-in-Charge.

1.1.3.5. The cement shall be stored in a weather proof building with facilities for inspection.

1.1.3.6. The contractor shall maintain a cement register showing dates of receipt and issue, quantities used daily and balance which shall be accessible to the Engineer-in-Charge.

1.1.3.7. For cement stored in silo, clauses 1.1.3.3 and 1.1.3.4 are not applicable.

1.1.4. STEEL REINFORCEMENT

1.1.4.1. The reinforcement steel used for the work will have to be procured by the contractor and shall be HYSD bars of Fe550/ Fe 500D grade conforming to IS:1786 as per the Schedule of Quantities unless otherwise approved by the Engineer-in-Charge.

1.1.4.2. As far as possible, the reinforcement steel required for the work shall be procured from Steel Authority of India or Rashtriya Ispat Nigam Ltd. The reinforcement steel can also be procured from the firms TATA Iron & Steel, Jindal Steel & Power Ltd., JSW and Shyam Steel Industries for use in the work subject to production of valid license certificate from BIS. In case steel is not available from the above sources, the contractor shall obtain specific approval from the Engineer-in-Charge well in advance for purchase of steel from other sources.

1.1.4.3. The contractor shall have to obtain and furnish test certificates to the Engineer-in-Charge in respect of all supplies of steel brought by him to the site of work. Samples shall also be taken and got tested by the Engineer-in-Charge as per provisions in this regard in relevant BIS codes. In case the test results indicate that the steel arranged by the Contractor does not conform to BIS codes, the same shall stand rejected and shall be removed from the site of work by the Contractor at his cost within a week’s time of written orders from the Engineer-in-Charge to do so.

1.1.4.4. The steel reinforcement shall be brought to the site in bulk supply of 10 tonnes or more or as decided by the Engineer-in-Charge.

1.1.4.5. The steel reinforcement shall be stored by the contractor at site of work in such a way as to prevent distortion and corrosion and nothing extra shall be paid on this account. Bars of different sizes and lengths shall be stored separately to facilitate easy counting and checking.

1.1.4.6. For checking nominal mass, tensile strength, bend test etc., specimen of sufficient length as per IS:432/ IS:1608/ IS:1599 or as specified by the Engineer-in-Charge shall be cut from each size of the bar at random at frequency not less than the specified below.

Size of bar	For consignment below 100 tonnes	For consignment over100 tonnes
Under 10 mm dia	One sample for each 25 tonnes or part thereof	One sample for each 40 tonnes or part thereof
10 mm to 16 mm dia	One sample for each 35 tonnes or part thereof	One sample for each 45 tonnes or part thereof
Over 16 mm dia	One sample for each 45 tonnes or part thereof	One sample for each 50 tonnes or part thereof

1.1.4.7. The contractor shall supply free of charge the steel required for testing. The cost of tests shall be borne by the Contractor.

1.1.4.8. Steel brought to site and steel remaining unused shall not be removed from site without the written permission of the Engineer-in-Charge.

1.1.5. WATER

1.1.5.1. Clean fresh water free from oils, acids, alkalies, salt, sugar, organic materials or other harmful materials shall be used for washing aggregates, mixing and curing of concrete. The water used shall comply with clause 5.4 of IS:456-2000. Potable water is generally considered good for mixing concrete.

1.1.5.2. **Cochin Port Authority will not provide/ supply water for the work**. Water has to be arranged by the contractor himself for the construction works including curing work at his own risk and cost.

1.1.5.3. Samples of water arranged by the contractor shall be taken by the Engineer in Charge and got tested in accordance with the provisions of relevant BIS codes. In case test results indicate that the water arranged by the contractor does not conform to the relevant BIS codes, the same shall not be used for any works. The cost of tests shall be borne by the contractor.

1.1.5.4. Water found satisfactory for mixing is also suitable for curing. However, water used for curing shall not produce any objectionable stain or unsightly deposit on the surface. Sea water shall not be used for mixing or curing.

1.1.6. ADMIXTURES IN CONCRETE

1.1.6.1. Admixture in concrete will be allowed only with prior approval of the Engineer–in–Charge. The contractor shall produce test certificates from recognized laboratories before use, if so desired by the Engineer–in–Charge.

1.1.7. CEMENT CONCRETE PAVER BLOCKS

1.1.7.1. Factory made chamfered edge, non-slippery, decorative rectangular/ Square/ Cobble pattern cement concrete interlocking paver block shall be of M40 grade, 100 mm thickness and minimum compressive strength 40mpamade in plain cement concrete and approved size and shape, colour and pattern, manufactured by the table vibratory method using PU moulds and the water absorption shall be less than 7% as per IS :15658. The paver block shall conform to the approved dimensions, drawings and relevant Indian Standards.

1.1.7.2. The colour design and pattern shall be got approved by the Engineer-in-Charge.

1.1.8. P.V.C. PIPES (FOR DRAINAGE LINES)

1.1.8.1. PVC pipes shall conform to IS: 4985 and class as specified in the schedule. The pipes shall have BIS certification marks. The internal and external surface of the pipe shall be smooth and clean, free from grooving and other defects.

1.1.9. 6mm SIZE AGGREGATE

1.1.9.1. 6mm size graded aggregate conforming to IS 383-2016 shall be used. Aggregates which are not perfectly clean shall be washed in clean water to the entire satisfaction of the Engineer-in-Charge.

1.1.10. MATERIALS FOR WET MIX MACADAM

1.1.10.1. **Coarse Aggregates**:

Coarse aggregates shall be crushed stone. If crushed gravel/shingle is used, not less than 90 per cent by weight of the gravel/shingle pieces

retained on 4.75 mm sieve shall have at least two fractured faces. The aggregates shall conform to the physical requirements set forth in Table 400-12 of the MORTH, which is reproduced below.

PHYSICAL REQUIRMENTS OF COARSE AGGREGATES FOR SUB-BASE/BASE COURSES

Sl. No.	Test	Test method	Requirements
1	Los Angeles Abrasion value or Aggregate Impact value	IS:2386 (Part-4) IS:2386 (Part-4) or IS: 5640	40 per cent (Max.) 30 per cent (Max.)
2	Combined Flakiness and Elongation indices (Total)	IS:2386 (Part-1)	35 per cent (Max.)*

* To determine this combined proportion, the flaky stone from a representative sample should first be separated out. Flakiness index is weight of flaky stone metal divided by weight of stone sample. Only the elongated particles be separated out from the remaining (non-flaky) stone metal. Elongation index is weight of elongated particles divided by total non-flaky particles. The value of flakiness index and elongation index so found are added up.

1.1.10.2. Grading requirements: The aggregates shall conform to the grading given in Table 400-13 of MoRTH, which is reproduced below:

(Table 400.13 of MoRT&H 'Specification)

Grading Requirements of aggregates for Wet Mix Macadam

IS Sieve Designation	Percent by weight passing the IS Sieve the IS sieve
53.00 mm	100
45.00 mm	95-100
26.50 mm	-
22.40 mm	60-80
11.20 mm	40-60
4.75 mm	25-40
2.36 mm	15-30
0.600 mm	8-22

0.750 mm	0-5

Materials finer than 425 micron shall have Plasticity Index (PI) not exceeding 6. The final gradation approved within these limits shall be well graded from coarse to fine and shall not vary from the low limit on one sieve to the high limit on the adjacent sieve or vice versa.

1.1.11. RETRO REFLECTIVE SIGN BOARDS

The contractor shall manufacture supply and fix retro reflective sign boards as per the following:-

1.1.11.1. Aluminium sheets used for sign boards shall be of 2mm thick smooth, hard and corrosion resistant aluminium alloy confirming to IS 736 material designation 24345 or 1900.

1.1.11.2. Reflective & Graphic Materials

The retro reflective sheeting used on the signs shall consist of white or coloured sheeting having a smooth outer surface which has the property of retro reflection over its entire surface. It shall be weather resistant and exhibit colour fastness. It shall be new and unused and show no evidence of cracking, scaling, and pitting, blistering, edge lifting or curling and shall have negligible shrinkage or expansion.

The sheeting shall be of high-intensity encapsulated type conforming strictly to ASTM-D 4956-01 Type-IV. Adhesive Backing shall be of heat and pressure-activated adhesive backing conforming to ASTM-D-4956-01 Class-2. This sheeting shall be of high intensity retro-reflective sheeting made of micro-prismatic retro-reflective element material coated with pressure sensitive adhesive. The retro-reflective surface after cleaning with soap and water and in dry condition shall have the minimum coefficient of retro-reflection (determined in accordance with ASTM D:4956-09) as indicated in Table below.

Acceptable Minimum Co-efficient of Retro-Reflection for High Intensity Micro-Prismatic Grade Sheeting (Type IV) (Candelas Per Lux Per Square Metre)

Observation	Entrance	White	Yellow	Orange	Green	Red	Blue	Brown
$0.1^{0\,B}$	-4^0	500	380	200	70	90	42	25
$0.1^{0\,B}$	$+30^0$	240	175	94	32	42	20	12
0.2^0	-4^0	360	270	145	50	65	30	18
0.2^0	$+30^0$	170	135	68	25	30	14	8.5
0.5^0	-4^0	150	110	60	21	27	13	7.5
0.5^0	$+30^0$	72	54	28	10	13	6	3.5

A - Minimum Coefficient of Retro reflection (RA) cd/fc/ft2 (cd-Ix-1m2).

B - Values for 0.1º observation angles are supplementary requirements that shall apply only when specified by the purchaser in the contract or order. When totally wet, the sheeting shall show not less than 90 percent of the values of retro reflection indicated in Table above. At the end of 7 years, the sheeting shall retain at least 80 percent of its original retro-reflectance.

1.1.11.3. Adhesive

The sheeting shall have a pressure-sensitive adhesive of the aggressive-tack type requiring no heat, solvent or other preparation for adhesion to a smooth clean surface, in a manner recommended by the sheeting manufacturer and approved by Engineer-in-Charge. The adhesive shall be protected by an easily removable liner (removable by peeling without soaking in water or other solvent) and shall be suitable for the type of material of the base plate used for the sign. The Adhesive shall form a durable bond to smooth, corrosion and weather resistant surface of the base plate such that it shall not be possible to remove the sheeting from the sign base in one piece by use of sharp instrument. The sheeting shall be applied in accordance with the manufacturers specifications.

1.1.11.4. The various materials and fabrication of the traffic signs shall conform to the following requirements:

Concrete - Concrete for foundation shall be of M 25 Grade as shown on the drawings or otherwise as directed by the Engineer.

Reinforcing Steel - Reinforcing steel shall conform to the requirement of IS:1786 unless otherwise shown on the drawing.

Bolts, Nuts, Washers- High strength bolts shall conform to IS:1367 whereas precision bolts, nuts, etc., shall conform to IS:1364.

Plates and Supports - Plates and support sections for the sign posts shall conform to IS:226 and IS:2062 or any other relevant IS Specifications.

1.1.12. MATERIALS NOT SPECIFIED

All materials not herein detailed and fully specified but which may be required for use on works, shall be subjected to the approval of the Engineer-in-Charge without which they shall not be used anywhere in the permanent works.

1.1.13. SAMPLING AND TESTING OF MATERIALS

(1) Sampling and testing of the material supplied by the contractor for use on the work shall be done as per the provisions of the relevant BIS codes/specifications. In the absence of BIS specification in a particular case, the sampling and testing shall be done as directed by the Engineer-in-Charge as sound engineering practice. Material conforming to the specifications and approved by the Engineer-in-Charge shall only be used by the contractor.

(2) All the sampling and testing shall be done at the contractor’s cost.

1.2. DETAILEDSPECIFICATIONS FOR ITEMS OF CIVIL WORKS

1.2.1. GENERAL

1.2.1.1. Except where otherwise specified or authorised by the Engineer-in-Charge all items of works executed by the Contractor must conform to the latest edition of the Bureau of Indian Standard (BIS) Specifications, IRC, MORT&H's specifications and Code of practices published by BIS. Where no such specifications or code of adoption, the tenderer while indicating such specifications shall practice exists the latest BSS codes of practice shall also be considered for enclose the full set of the publication so referred and not in extracts. Photostat / Xerox copies in duplicate shall be forwarded which shall not be returned to the Contractor. In absence of any specification the department reserves the right to adopt trade specifications and/or sound engineering practices for the specialised work as may be decided by the Engineer-in-Charge which shall be final, conclusive and binding on the contractor.

1.2.2. DISMANTLING AND DEMOLITION WORKS

1.2.2.1. The tenderers shall inspect the site and carry out the required investigation by himself about the present condition of the existing structures and assess the difficulties and the work involved in its dismantling and removal. It will be deemed that the tenderer has inspected the site and satisfied himself the condition of the structure and the nature of the work involved for the dismantling and removal and that the tenderer has estimated its cost accordingly and the Port will be in no way responsible for the lack of such knowledge and also consequences thereof to the tenderer.

1.2.2.2. Following dismantling works are to be carried for constructing new drainage & cable duct structure:

(i) Demolishing/ dismantling R.C.C. work manually/ by mechanical means of the existing drainage on both sides of Marar road and GV Iyyer road.

(ii) Dismantling of flexible pavement (bituminous courses) from road crossings of Marar road at 6th Cross road, KPK Menon road, Sanitary office & between APT Marine Engineering and Food Storage Depot, for foundations of road sign boads and for drains, cable ducts and box culverts at the intersection of 6th Cross road and GV Iyyer road.

1.2.2.3. The retrieved steel reinforcement bars obtained from dismantling shall become the property of the Port and shall be stacked in a place within a distance of 3km as directed by the Engineer-in-Charge.

1.2.2.4. The debris shall not be heaped on the road causing disturbance to the movement of Vehicles and pedestrians. The debris shall be cleared on completing each day's work, if so, directed by the Engineer-in-Charge.

1.2.2.5. Any serviceable material, obtained during dismantling or demolition, shall be separated out and stacked properly as directed by the Engineer-in-Charge within a lead of 50 meters. All unserviceable materials, rubbish etc. shall be disposed off by mechanical/ manual means, including loading, transporting, unloading to dumping ground at a distance of about 3km,as directed by Engineer-in-charge or authorized locations by urban local bodies as directed by the Engineer-in-Charge.

1.2.3. EARTH WORK EXCAVATION

1.2.3.1. The excavation shall be carried out for the drain ducts, cable ducts, new road, culverts and other allied works.

1.2.3.2. Before the earth work is started, the area coming under cutting and filling shall be cleared of shrubs, rank vegetation, grass, brushwood, trees and saplings of girth up to 30cm measured at a height of one metre above ground level and rubbish removed up to a distance of 50 metres outside the periphery of the area under clearance. The roots of trees and saplings shall be removed to a depth of 60cm below ground level or 30 cm below formation level or 15 cm below sub grade level, whichever is lower, and the holes or hollows filled up with the earth, rammed and levelled.

1.2.3.3. The trees of girth above 240 cm measured at a height of one metre above ground shall be cut only after getting permission of the Engineer-in-Charge. Felling trees shall include taking out roots up to 60 cm below ground level or 30 cm below formation level or 15 cm below sub-grade level, whichever is lower. Payment for cutting such trees and removing the roots shall be made separately.

1.2.3.4. Existing structures and services such as old buildings, culverts, fencing, water supply pipe lines, sewers, power cables, communication cables, drainage pipes etc. within or adjacent to the area if required to be diverted/removed, shall be diverted/dismantled as per directions of the Engineer-in Charge and payment for such diversion/dismantling works shall be made separately.

1.2.3.5. Lead of 50 m mentioned in the ‘Schedule of Quantities’ is the average lead for the disposal of excavated earth within the site of work. The actual lead for the lead for the disposal of earth may be more or less than the 50 m for which no cost adjustment shall be made in the rates.

1.2.3.6. Disposal of Earth shall be disposed off at the specified location or as decided by the Engineer in-Charge.

1.2.4. SUPPLYING AND STACKING RED EARTH

1.2.4.1. Supplying and stacking good quality approved cut gravel/red earth obtained from an approved source, suitable for filling and earthwork purposes, including excavation/loading at source, transportation to the designated work site, unloading and stacking in properly formed heaps at locations indicated by the Engineer-in-Charge.

1.2.4.2. The material shall be clean, well graded and free from organic matter, roots, vegetation, rubbish, debris, excessive clay and other deleterious materials and shall be suitable for the intended filling work.

1.2.4.3. The source of the material shall be submitted to and approved by the Engineer-in-Charge before commencement of supply. The contractor shall ensure that the material supplied conforms to the required quality and is suitable for use in the proposed filling/earthwork.

1.2.4.4. The material shall be transported by suitable tippers/dumpers and deposited at the locations directed by the Engineer-in-Charge without obstruction to existing roads, drainage facilities or other works.

1.2.4.5. The work shall include all excavation/loading at source, transportation for all leads and lifts, unloading, stacking, labour, machinery, tools, tackles, fuel, consumables and all incidental works, complete as directed by the Engineer-in-Charge.

1.2.4.6. Measurement shall be based on the actual quantity of approved material supplied and properly stacked at site, as measured and accepted by the Engineer-in-Charge, in the unit specified in the BOQ.

1.2.5. PLAIN AND REINFORCED CEMENT CONCRETE

1.2.5.1. **General**

The concrete used for all works, concreting procedure etc. shall be in accordance with IS:456-2000.

1.2.5.2. **Concrete Mix**

Mix used for R.C.C. shall be of minimum M25 grade unless otherwise specified. Design mix shall be used for M20 and higher grade of concrete unless otherwise specified in the schedule.

1.2.5.3. **Nominal Mix**

For nominal mix concrete, proportion of fine aggregate to coarse aggregate shall be 1:2 by mass. The minimum cement content per cubic meter of nominal mix concrete shall be as per table 5 of IS: 456.

1.2.5.4. **Design Mix**

1.2.5.4.1. For design mix concrete of following grades of concrete the minimum cement content per cubic metre and maximum water cement ratio are as given below.

Sl. No.	Grade of Concrete	Minimum Cement Content in Kg / m³	Maximum Free Water Cement ratio
1	M25	330	0.50

1.2.5.4.2. For design mix concrete, the contractor shall make calculations jointly with Engineer-in-Charge and carryout all necessary tests at contractor's cost to determine the proportion by weight of cement, aggregates (coarse and fine), admixture if required and water necessary to produce concrete of required grade having the desired workability and, water cement ratio not exceeding the allowable limit, prior to commencement of work. The contractor shall submit the following for the approval of Engineer-in-Charge.

(i) The proportion of cement, coarse aggregate, fine aggregate and water so determined.

(ii) The sieve analysis of aggregates which he proposes to use in the works.

(iii) Full details of the tests conducted.

(iv) All calculations relevant to mix design.

1.2.5.4.3. When the proportions are submitted to the Engineer-in-Charge which he considers will produce concrete having the required properties, it shall become the declared proportions to be used for the work. The agreement

by the Engineer-in-Charge to such declared proportions shall not relieve the contractor of any of his responsibilities to use in the work at all times concrete having the required properties. No deviation from the declared proportions shall be allowed unless and until the Engineer-in-Charge shall have given his written authorization for the adoption of revised proportions for the concrete.

1.2.5.4.4. Sampling, testing and acceptance criteria for designed mix concrete shall be as per clause 15, 16 & 17 of IS:456unless otherwise specified. Sampling and testing shall be done at contractor's own cost. Testing shall be done in a laboratory approved by the Engineer-in-Charge.

1.2.5.5. **Size of Coarse Aggregate**

For all concrete, plain or reinforced of M20 and higher grades, 20 mm size graded aggregate conforming to IS:383 shall be used unless otherwise specified. If 20 mm graded aggregates as per IS:383 are not readily available, graded 20 mm aggregate shall be obtained by blending 20 mm and 12.5/ 10 mm aggregates in the proportion arrived based on the combined sieving of aggregates.

1.2.5.6. **Mixing of Concrete**

1.2.5.6.1. Concrete shall be mixed in a drum or pan type batch mixer, the type and capacity of which is to be approved by the Engineer-in-Charge. Time allowed for mixing, after all ingredients have been placed in the mixers shall not be less than two minutes. If there is segregation after unloading from the mixer, the concrete should be remixed.

1.2.5.6.2. Ready mix concrete from outside source shall be allowed for use on the work subject to the conditions that: (i) written permission shall be obtained from the Engineer-in-Charge, (ii) all quality control measures as stipulated by the Engineer-in-Charge are strictly adhered to by the contractor at his cost, (iii) all design mix calculations shall be submitted by the contractor for approval of the Engineer-in-Charge & approval obtained; and (iv) all expenses towards conveyance and incidentals of providing Departmental supervision at the mixing plant shall be borne by the contractor.

1.2.5.7. **Assembly of Reinforcement for Reinforced Cement Concrete**

1.2.5.7.1. The contractor shall, when ordered, submit to the Engineer-in-Charge the detailed bar bending schedule for his scrutiny and approval sufficiently in advance of the due date of commencement of the relevant items of works. While working out the bar bending schedule, the contractor shall ascertain

the length of bars likely to be made available to him and the schedule shall be so made, keeping the wastage/ cut bits of bars to bare minimum without hampering technical requirements. If the size of the steel bars specified in the drawing or schedule is not available, the nearest size available shall be used. Revised drawing shall be issued to the contractor substituting the new size of reinforcement and bar bending schedule shall be prepared by the contractor accordingly. No extra payment shall be made to the contractor for making this substitution. The fabrication of reinforcement shall commence only after the bar bending schedule is approved by the Engineer-in-Charge.

1.2.5.7.2. Reinforcement shall be cut to the exact length and made truly straight and then bent to the exact shape and dimensions as indicated in the drawings. The bending and fixing of bars shall be done in accordance with I.S. 2502 unless otherwise specified.

1.2.5.7.3. The reinforcement shall be cleaned by wire brush etc. to remove oil, grease, loose mill scale, loose rust or other deleterious matter that may reduce or destroy bond etc. before tying in position and also immediately before placing the concrete.

1.2.5.7.4. All reinforcement shall be placed and maintained in accordance with the drawings. Tolerance on placing of reinforcement shall be in accordance with clause 12.3 of 1.S. 456-2000. Bolts, nuts, washers and rivets, etc. required for complete erection of reinforcement and keeping in position shall be supplied by the contractor at his own cost.

1.2.5.8. **Formwork**

1.2.5.8.1. As far as possible GI Sheet formwork shall be used for concrete work. Mild steel/ marine plywood formwork shall also be used for concrete work with the approval of Engineer-in-Charge. The form work shall be designed and constructed to the shape, lines and dimensions shown in the drawings within the tolerance limit and specified in clause 11.1 of IS:456-2000. Joints of the form works shall be made water tight by providing suitable beadings/gasket as approved by the Engineer-in-Charge.

1.2.5.8.2. All rubbish, particularly chippings, shall be removed from the interior of the forms before the concrete is placed and the form work in contact with the concrete shall be cleaned and thoroughly wetted or treated with an approved composition. Care shall be taken that such approved composition is kept out of contact with the reinforcement. Before re-used, all forms shall

be thoroughly scraped, cleaned, nails removed, holes that may be suitably plugged and joints examined and when necessary repaired and the inside retreated to prevent adhesion, to the satisfaction of Engineer-in-Charge.

1.2.5.8.3. Contractor shall equip with himself with enough shuttering material to complete the job in the stipulated time. Measurement shall be made in square meters for the gross quantity of work done including providing compact bed. The rate quoted shall include cost of all materials, labour etc. required for completion of work.

1.2.5.9. **Cover to Reinforcement**

1.2.5.9.1. Cover as specified in drawing shall be provided by using cement concrete block made from concrete of same grade as that of main work unless otherwise directed by the Engineer-in-Charge.

1.2.5.10. **Transporting, Placing, Compacting and Curing of Concrete**

1.2.5.10.1. Transporting placing, compacting and curing of concrete shall be as per clause 13 of IS: 456: 2000.

1.2.5.10.2. Concrete shall be transported from the mixer to the worksite as rapidly as possible which will prevent the segregation or loss of any ingredient, and for maintaining the workability.

1.2.5.10.3. The concrete shall be placed and compacted before setting commences and should not be subsequently disturbed. Care should be taken to avoid displacement of reinforcement or movement of formwork.

1.2.5.10.4. All concrete shall be vibrated unless otherwise specified or approved by the Engineer-in-Charge and such vibrating shall be as required by the Engineer in-Charge. The mechanical vibrators complying with IS: 2505, IS: 2506 or IS: 4656 shall be used for compacting concrete. All vibrations shall be carried out to a plan approved by the Engineer-in-Charge. No workman shall be allowed to operate the vibrator without having received instructions and training in its use. Care must be taken to avoid segregation and excessive vibration.

1.2.5.10.5. Concreting shall be carried out continuously up to construction joints, the positions and arrangement of which shall be as directed by the Engineer-in Charge. When the work has to be resumed the construction joints shall be prepared in accordance with clause 13.4 of IS: 456:2000.

1.2.5.10.6. Unless otherwise specified, all concrete shall be kept continuously in a damp condition by ponding or by covering with a layer of sacking, canvas, hessian or similar materials with fresh water for not less than 7 days after laying the concrete. If curing is not done properly the department will be at liberty to engage labour for curing and the expenditure incurred will be recovered from the contractor's bill. The decision of the Engineer-in-Charge will be final on this.

1.2.5.10.7. Stripping time for the form work shall be as stipulated in clause 11.3 of IS: 456-2000. Any impression, fins etc. that may occur from the form work shall be removed and treated with cement mortar 1:1.5 (1) cement: 1.5 sand).

1.2.6. SCARIFYING EXISTING WBM ROAD SURFACE

1.2.6.1. All dirt, dust, cacked up mud, slush, animal droppings, vegetation and all other rubbish shall be removed from the water bound macadam surface.

1.2.6.2. The macadam surface shall be scarified to a depth of approximately 5 cm with such additional picking of high parts of the road as may be necessary to the required camber and gradient as directed by the Engineer- in-Charge. Any hollows that remain after picking shall be filled with new aggregate 50 mm nominal size and well consolidated to bring the surface to template.

1.2.6.3. Finishing**:** The scarified aggregate shall be raked to bring smaller stones on the top and surface brought to the required camber and gradient with tolerance of 12 mm longitudinally as well as transversely. All rubbish etc. shall be disposed off as directed by the Engineer-in-Charge. Scarifying operation will also include consolidation with road roller the aggregate received from scarifying, although this aggregate will be consolidated along with aggregate of new wearing course to be paid separately.

1.2.6.4. Unserviceable material, debris and rubbish shall be removed and disposed of within a lead of 50 m.

1.2.6.5. The finished work shall be measured between the kerb or channel stones or brick edging etc. as the case may be. Length and breadth shall be measured correct to a cm. The area shall be calculated in square metres correct to two places of decimal.

1.2.6.6. The rate shall include the cost of labour and materials involved in all the operations described above except the cost of stone aggregate which shall be paid for separately.

1.2.7. PROVIDING WET MIX MACADAM BASE (WMM)

1.2.7.1. This work shall consist of laying and compacting clean, crushed, graded aggregate and granular material, premixed with water, to a dense mass on a prepared subgrade/sub-base/base or existing pavement as the case may be in accordance with the requirements of these Specifications.

1.2.7.2. The material shall be laid in one or more layers as necessary to lines, grades and cross-sections shown on the approved drawings or as directed by the Engineer-in-charge. The thickness of a single compacted Wet Mix Macadam layer shall not be less than 75 mm. When vibrating or other approved types of compacting equipment are used, the compacted depth of a single layer of the sub base course may be increased to 200 mm upon approval of the Engineer-in-charge.

1.2.7.3. **Construction operations**

(i) Preparation of Base

The surface of the sub grade / sub base / base to receive the Wet Mix Macadam shall be prepared to the specified lines and crossfall (Camber) as necessary and made free of dust and other extraneous materials. Any ruts or soft yielding places shall be corrected in an approved manner and rolled with 80-100 kN smooth wheeled roller until firm surface is obtained if, necessary by sprinkling water. Weak places shall be strengthened, corrugations removed and depressions and pot holes made good with suitable materials, before spreading the aggregate for WMM.

Where the existing surface over which the sub base of WMM is to be laid is black topped, to ensure effective internal drainage, furrows 50 mm x 50 mm (depth of furrows increased to reach bottom of bituminous layer where necessary) at one metre intervals shall be cut in the existing bituminous surface at 45 degrees to the central line of the carriageway at one metre intervals in the existing road before the WMM is laid.

(ii) Provision of lateral confinement of aggregates

While constructing Wet Mix Macadam, arrangement shall be made for the lateral confinement of wet mix. This shall be done by laying materials in adjoining shoulders along with that of Wet Mix Macadam layer and following the sequence of operations described in Clause 404. of MORT&H's

Specification for Road and Bridge works or as directed by the Engineer-in-Charge.

(iii) Preparation of mix

(a) Wet Mix Macadam shall be prepared in an approved mixing plant of suitable capacity having provision for controlled, addition of water and forced/positive mixing arrangement like pugmill or pan type mixer of concrete batching plant. For small quantity of wet mix work, the Engineer may permit the mixing to be done in concrete mixers.

(b) Optimum moisture for mixing shall be determined in accordance with IS: 2720 (Part-8) after replacing the aggregate fraction retained on 22.4mm sieve with material of 4.75mm to 22.4mm size. While adding water, due allowance should be made for evaporation losses. However, at the time of compaction, water in the wet mix should not vary from the optimum value by more than agreed limits. The mixed material should be uniformly wet and no segregation should be permitted.

(iv) Spreading of mix

(a) Immediately after mixing, the aggregates shall be spread uniformly and evenly upon the prepared sub grade in required quantities. In no case should these be dumped in heaps directly on the area where these are to be laid nor shall their hauling over a partly completed stretch be permitted.

(b) The first layer of mix shall be spread by suitable means so as to get a uniform and level surface as directed by the Engineer-In-Charge. The second layer of mix shall be spread either by a paver finisher or motor grader. For portions where mechanical means cannot be used, manual means as approved by the Engineer –in-charge shall be used.

(c) The surface of the aggregate shall be carefully checked with templates and all high or low spots remedied by removing or adding aggregate as may be required. The layer shall be tested by depth blocks during construction. No segregation of larger and fine particles should be allowed. The aggregate as spread should be of uniform gradation with no pockets of fine materials.

(v) Compaction

(a) After the mix has been laid to the required thickness, grade and camber, the same shall be uniformly compacted, to the full depth with suitable roller. If the thickness of single compacted layer does not exceed 100mm, a smooth wheel roller of 80 to 100 kN weight may be used. For a compacted single layer up to 200 mm, the compaction shall be done with the help of vibratory roller of minimum static weight of 80 to 100 kN or equivalent capacity roller. The speed of the roller shall not exceed 5 km/hr.

(b) In the portions having unidirectional super elevation, rolling shall commence from the lower edge and progress gradually towards the upper edge. Thereafter, roller should progress parallel to the centre line of the road, uniformly over-lapping each preceding track by at least one-third width until the entire surface has been rolled. Alternate trips of the roller shall be terminated in stops at least 1m away from any preceding stop.

(c) In portions in camber, rolling should begin at the edge with the roller running forward and backward until the edges have been firmly compacted. The roller shall then progress gradually towards the centre parallel to the centre line of the road uniformly overlapping each of the preceding track by at least one- third width until the entire surface has been rolled.

(d) Any displacement occurring as a result of reversing of the direction of a roller or from any other cause shall be corrected at once as specified and/or removed and made good.

(e) Along forms, kerbs, walls or other places not accessible to the roller the mixture shall be thoroughly compacted with mechanical tampers or a plate compactor. Skin patching of an area without scarifying the surface to permit proper bonding of the added materials shall not be permitted.

(f) Rolling should not be done when the sub grade is soft or yielding or when it causes a wave-like motion in the sub grade. If irregularities develop during rolling which exceed 12mm when tested with a 3 metre straight edge, the surface be loosened and premixed material added or removed as required before rolling again so as to achieve a uniform surface conforming to the desired grade and camber. In no case

should the use of unmixed material be permitted to make up the depressions.

(g) Rolling shall be continued till the density achieved is at least 98 per cent of the maximum dry density for the material as determined by the method outlined in IS: 2720 (Part-8).

(h) After completion, the surface of any finished layer shall be well closed, free from movement under compaction equipment or any compaction planes, ridges, cracks and loose material. All loose, segregated or otherwise defective areas be made good to the full thickness of the layer and re-compacted.

(vi) Setting and drying

After final compaction of wet mix macadam course, the surface shall be allowed to dry for 24 hours.

1.2.7.4. No vehicular traffic of any kind should be allowed on the finished wet mix macadam surface till it has dried and the wearing course laid.

1.2.7.5. **Surface evenness**

The surface finish of construction shall conform to the requirements of Clause 902 of MORT&H's Specification for Road and Bridge works or as directed by the Engineer-in-Charge.

1.2.7.6. **Quality control**

For control on the quality of materials and works carried out, relevant provisions of Section 900 of MORT&H's Specification for Road and Bridge works shall apply or as directed by the Engineer-in-Charge.

1.2.7.7. **Measurement for payment**

Wet Mix Macadam course shall be measured as finished work in cubic metres.

1.2.7.8. **Rate**

The contract unit rate for WMM shall be payment in full for carrying out the required operations including full compensation for making arrangements for traffic, furnishing all materials to be incorporated in the work including all royalties, fees, rents wherever necessary and all leads and lifts, all labour,

tool, equipment and incidentals to complete the work to specifications, carrying out the required tests for quality control etc.

1.2.8. PROVIDING AND LAYING CEMENT CONCRETE PAVER BLOCKS

1.2.8.1. The paver blocks shall be neatly stacked as per standard practice and as directed by the Engineer - in - Charge and laying of paver blocks shall be as per IS:16777.

1.2.8.2. Factory made cement concrete precast paver block of M-40 or otherwise specified grade to be used. Paver blocks to be of approved brand and manufacturer and of approved quality. Paver blocks shall be 100mm thick and made of by block making machine with vibratory compaction.

1.2.8.3. Over the prepared surface, interlocking paver block to be fixed on the compacted bed of 50 mm or specified otherwise thick of 6mm metal of approved specification and it shall be rammed and compacted as directed by the Engineer-in-Charge. The blocks shall be set hand tight and the surface shall be rammed and vibrated properly to bring out joints not more than 2to 3mm wide between blocks. After compacting, the joints shall be filled with the crusher sand of approved type and quality including sweeping or as specified and as directed by Engineer-in-charge. The top surface of the paved area shall be in uniform level and no protrusions shall be seen at the top.

1.2.8.4. Area provided with paver block to be measured in sqm. correct up to two places of decimal. The rate includes the cost of the material including 6 mm metal required for compact bed &crusher sand for filling, labour, tools etc. required in all the operations described above.

1.2.9. RETRO REFLECTIVE SIGN BOARDS

1.2.9.1. Manufacturing, supplying and fixing mandatory/ regulatory retro reflective sign boards of 900 mm diameter made from 2 mm thick aluminium sheet, fully covered on the front face with Type IV high intensity Encapsulated Retro Reflective Sheeting conforming to ASTM D 4956 and IRC: 67, complete with bi lingual legends, symbols, borders and approved colour combinations as per drawings.

1.2.9.2. The sign face shall be fixed to a 25x25x3 mm M.S Angle frame using Aluminium alloy rivets at 200 mm c/c. The frame shall be mounted on 35x35x6 mm M.S angle brackets fixed to a 50x50x6 mm M.S Tee section post of 3750 mm support length, welded with 100x100x5 mm base plate including all drilling, welding, cutting and fabrication.

1.2.9.3. All M.S members shall be cleaned, primed with Zinc Chromate primer and finished with two coats of synthetic enamel paint of approved shade. The backside of the aluminium sheet shall be protected with primer and two coats of epoxy paint.

1.2.9.4. The item shall include supply of all materials, fabrication, fixing, erection, alignment, painting, all labour, tools, tackles, transportation and incidental works complete in all respects as per IRC: 67, and the direction of Engineer-in-charge.

1.2.9.5. Surface to be reflectorised shall be effectively prepared to receive the retro-reflective sheeting. The Aluminium/ ACP sheeting shall be de-greased either by acid or hot alkaline etching and all scale/dust removed to obtain a smooth plain surface before the application of retro-reflective sheeting. Complete sheet of the material shall be used on the signs except where it is unavoidable. Sheeting with heat-activated adhesives may be spliced with an overlap not less than 5 mm or butted with a gap not exceeding 0.75 mm. The material shall cover the sign surface evenly and shall be free from twists, cracks and folds.

1.2.9.6. Sign posts, their foundations and sign mountings shall be so constructed as to hold these in a proper and permanent position against the normal storm wind load or displacement by vandalism. Normally, sign with an area up to 0.9 sq.m shall be mounted on a single post and for greater area two or more supports shall be provided. Sign supports shall be as specified in item or as per directions of Engineer-in-Charge. The work of foundation shall conform to relevant specification.

1.2.9.7. Backside of aluminium sheet portion shall be painted with two coats of epoxy paint. Any part and support frame with two or more coats of synthetic enamel paint.

1.2.9.8. **Performance Certificate**

Requisite performance certificate from the manufacturer of the ACM stating compliance with ACM technical specification as per the Table below shall be submitted by the contractor to the Engineer-in-Charge.

Specification for Aluminium Composite Material (ACM)

S. No.	Description	Specification for 4mm	
		Standard Test	Acceptable Value/Results
A	**Physical Tests for ACM**		
1	Over all thickness of ACM	Measurement	4mm (Tolerance + 0.2mm)
2	Aluminium Skin thickness (each side)	Measurement	0.5mm (Tolerance +/- 0.03mm)
	Panel weight (ACM)	Measurement	5.5 Kg/m2 (+ 5%)
B	**Mechanical Properties of ACM**		
1	Peel off strength with retro reflective sheeting. (Drum Peel Test)	ASTM D903	Min. 4 N/mm
2	Tensile strength	ASTM E638	Min. 40 N/mm2
3	0.2% Proof Stress	ASTM E638	Min. 34 N/mm2
4	Elongation	ASTM E638	Min. 6%
5	Flexural strength	ASTM C393	Min. 130 N/mm2
5	Shear strength with punch shear test	ASSTM D732	Min. 18 N/mm2
C	**Properties of Aluminium skin**		
1	Tensile strength (Rm)	ASTM E8	Min. 150 N/mm2
2	Modules of elasticity	ASTM E8	Min 70000 N/mm2
3	Elongation	ASTM E8	Min. 2%
4	0.2% proof stress	ASTM E8	Min. 110 N/mm2
D	Properties of High surface energy coating		
1	(90 deg) Peel adhesion strength of Retroreflective sheeting on ACM surface with high-surface energy coating	ASTM D330	Min. of 1.5 kgf i.e. Equal to or more than that with surface prepared aluminium

1.2.9.9. Warranty and Durability

The Contractor shall obtain from the manufacturer a **ten year** warranty as per IRC:67 for satisfactory performance including stipulated retro-reflectance of the retro-reflective sheeting, the screen printed areas and cut out sheeting and cut out durable transparent overlay film and submit the same to the Engineer-in-Charge.

Processed and applied in accordance with recommended procedures, the reflective material shall be weather resistant and following cleaning, shall show no appreciable discoloration, cracking, blistering or dimensional change and shall not have less than 50 percent of the specified minimum reflective intensity values when subjected to accelerated weathering of 1000 hours, using type E or EH Weather meter (AASHTO Designation M 268).

1.2.9.10. Measurement

These shall be measured in square meters up to two places of decimal.

1.2.9.11. **Rate**

The rate includes the cost of materials labour and equipments involved in all the operations described above except concrete, reinforcing steel, Bolt, nut & washers and plates & supports.

1.3.1 APPROVED MAKES

APPROVED MAKES		
1.	**Civil Works**	
1-1.	Cement	Ultratech, Birla, Coromandal, Malabar Cement, Ambuja, Zuari, Penna, Bharath, Dalmia or equivalent
1-2.	Reinforcement Bars	TATA, SAIL, RINL, JSW, JSPL, Shyam Steel or equivalent
1-3.	Admixtures for Concrete	BASF, FOSROC, SUNANDA, CERA CHEM, SIKA, MAPEI or its equivalent

*****Makes of items not mentioned if any, shall be got approved from Engineer – in- charge before executing the work.

SECTION - V

SECTION -V

COCHIN PORT AUTHORITY

1. PREAMBLE TO BILL OF QUANTITES

Sl. No.	Clause / Section	Description	Page No
1	1	General instructions	207
2	1.1	General	207
3	1.2	Rates and Prices to be inclusive	207-209
4	1.3	Tidal work and weather conditions	209
5	1.4	Method of measurement	209
6	1.5	Currency	209

SECTION V

COCHIN PORT AUTHORITY

1.PREAMBLE TO BILL OF QUANTITIES

1 General Instructions

1.1 General

1.1.1 This Bill of Quantities must be read within the Drawings, Conditions of Contract and the Specifications, and the Contractor shall be deemed to have examined the Drawings, Specifications, General Conditions of Contract and to have acquainted himself within the detailed descriptions of the Works to be done, and the way in which they are to be carried out.

1.1.2 Notwithstanding that the work has been sectionalized every part of it shall be deemed to be supplementary to and complementary of every other part and shall be read with it or into it so as it may be practicable to do so.

1.1.3 The detailed descriptions of work and materials given in the Specifications are not necessarily be repeated in the Bill of Quantities.

1.1.4 The Contractor shall be deemed to have visited the Site before preparing his tender and to have examined for himself the conditions under which the work will proceed and all other matters affecting the carrying out of the works and cost thereof.

1.1.5 The Tenderer will be held to have familiarized himself with all local conditions, in so far as they affect the work, means of access and the locality of existing services, in order to execute the Works measured and described hereinafter. No claims for want of knowledge in this respect will be reimbursed.

1.2 Rates and Prices to be Inclusive

1.2.1 The rates and prices tendered by the Bidder in the Schedule of Prices shall, except insofar as it is otherwise provided under the Contract, including but not limited to all Bidder's equipment, labour, supervision, materials, plant, wastage, fuel, erection, maintenance, insurance, profit, overheads, together with all general risks, liabilities and obligations set out or implied in the Tender Document including all taxes, duties, fees, royalty and other statutory deductions.

1.2.2 The Specifications are intended to cover the supply of material and the execution of all work necessary to complete the works. Should there be any details of construction or material which have not been referred to in the Specifications or in the Bill of Quantities and Drawings, but the necessity for which may reasonably be implied or inferred there from, or which are usual or essential to the completion of all works in all trades, the same shall be deemed to be included in the rates and prices entered in the Bill of Quantities. The rates and prices are to cover the item as described in the Bill of Quantities and if there is inconsistency in the description between the Bill of Quantities, Specifications or Drawings, the interpretation will be done according to General Conditions of Contract.

1.2.3 The Quantities given in the Bill are approximate and are given to provide a common basis for tendering. They are not to be taken as a guarantee that the quantities scheduled will be carried out or required or that they will not be exceeded. The employer/engineer reserves the right to delete any item and /or increase/reduce quantities indicated in the Bill of Quantities at any time. Payment will be made according to the actual quantities of work ordered and carried out in the contract. However, rates quoted shall be valid for any extent of variation in quantity of each individual item provided that the total contract value does not get altered by more than indicated in conditions of contract. No claim whatsoever for extra payment due to variation of quantities within the above said limit would be entertained.

1.2.4 The drawings for tender purposes are indicative only of the work to be carried out. However, the Tenderer must allow within his price for the items of work included in the Tender Documents for the details which will appear on subsequent drawings developed for construction purposes. Rates and price shall include any additional design/detailing to be carried out by the contractor.

1.2.5 The rates and prices shall include (except where separate items are given) for the provision and operation of the following items, for compliance with the Condition of Contracts, Special Conditions, the specifications and Tender Drawings.

(i) Supervision and labour for the Works.
(ii) All materials, installation /erection, handling and transportation.
(iii) All Contractor’s equipment
(iv) All testing and commissioning, insurance, maintenance, security, welfare facilities, overheads and profit and every incidental and contingent costs and charges whatsoever including.
(v) Provision and maintenance of Contractor’s Site offices, cabins, huts, maintenance and storage areas.

(vi) All necessary temporary services including fresh water, compressed air lines, electrical cabling and switchgear, telephone, walkie-talkie and facsimile facilities.
(vii) The maintenance of all Contractor's services.
(viii) All insurances for the Works.
(ix) Allow for complying with all environmental aspects as specified.
(x) For carrying out hot work of any kind contractor should consider safely for vessel in adjoining berth.
(xi) Detail design of components of temporary works, wherever necessary as directed by Engineer.

1.3 Tidal Works and Weather Conditions

1.3.1 The Contractor shall be deemed to have ascertained for himself the extent to which the work has to be carried out in tidal conditions, and his rates and prices shall include for all cost and charge whatsoever arising out of such working.

1.3.2 It is the Tenderer's responsibility to ascertain for himself the probable states of tides, their levels, times and durations. Any water levels stated in technical specifications and marked on the Drawings are intended to give an indication only of those likely to be encountered.

1.3.3 All rates are to be inclusive of work at the levels required taking into account the underwater work, tides and weather conditions. They are to include for any stopping of work by the Engineer under conditions stated in the specification.

1.4 Method of Measurement

1.4.1 Standard Method: The work included in the Bill of Quantities once completed will be presented to the Engineer's representative for checking quality and quantity of work. The Engineer 's representative after satisfying himself issue a certificate to that effect. unless stated or billed otherwise quantities shall be measured in accordance with Indian Standard Code No. 1200 for civil work and shall be not as they are providing in the works. The rates and prices shall include whatsoever allowance is necessary for wastage, working spaces, etc.
The mode of measurement and payment described in the relevant technical specifications shall apply for the relevant items.

1.5 Currency

1.5.1 All monetary reference therein and the Bill of Quantities shall be priced in Indian Rupee Currency.

2.LIST OF DRAWINGS

Sl. No.	Drawing No.	Description of drawing	No. of sheets	Page No.
1	9790-01-2026	Location Plan	1	211
2	9790-02-2026	Cross section of Road and Box Culvert	1	212

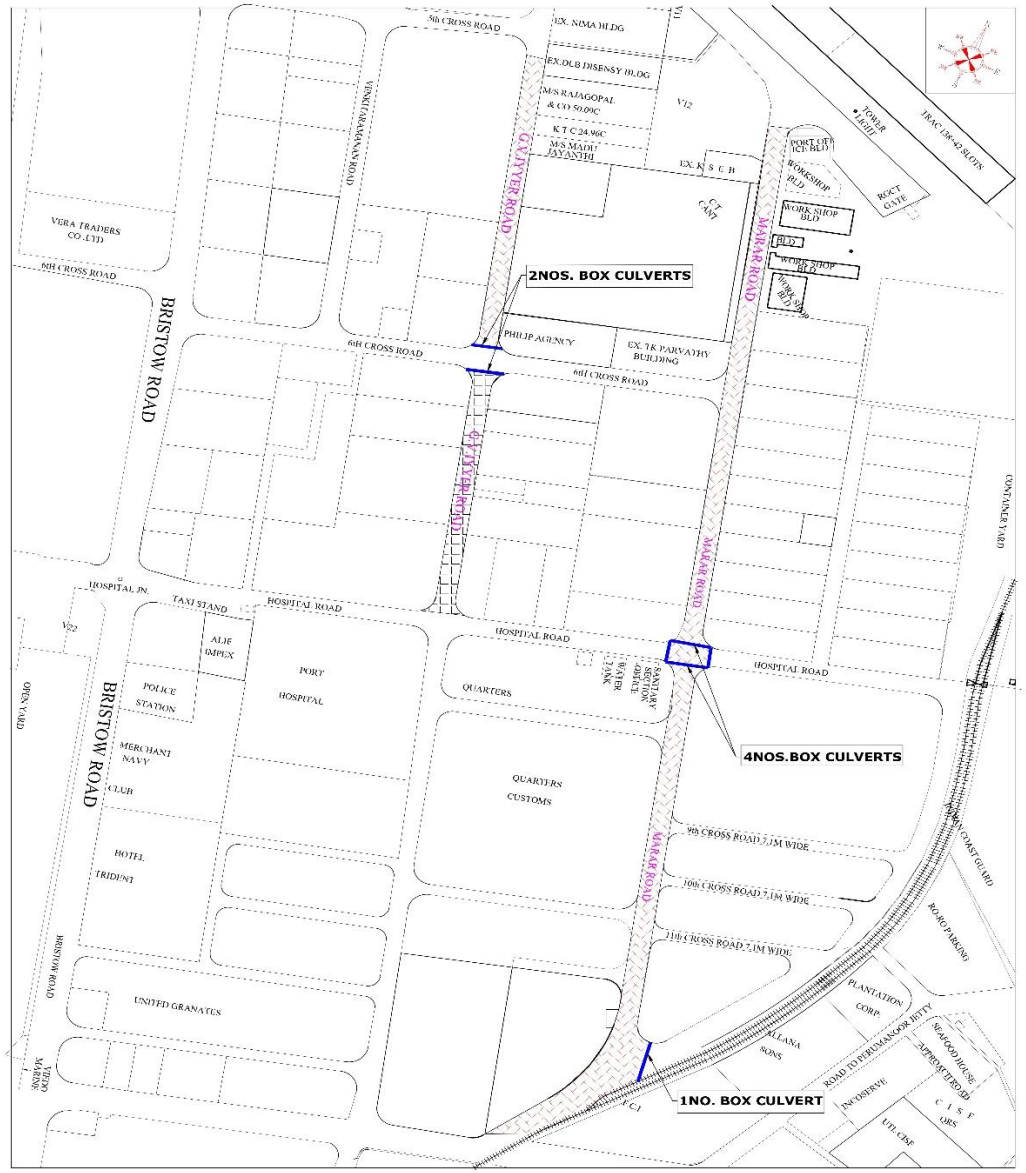

ISSUED FOR TENDER PURPOSE ONLY

———	PROPOSED BOX CULVERT SHOWN THUS.
	RESURFACING OF PROPOSED MARAR ROAD & GV IYYER ROAD SHOWN THUS.

NOTES :-

1. ALL DIMENSIONS ARE IN MILLIMETRES

NO.	DATE	REVISIONS	A.E.E.	E.E.	DY.CE-I

COCHIN PORT AUTHORITY

COCHIN - 682009

RECONSTRUCTION OF MARAR ROAD & GV IYYER ROAD WITH CC PAVER BLOCKS & CONSTRUCTION OF DRAIN,BOX CULVERTS,UTILITY DUCTS ETC. AT W/ISLAND

LOCATION PLAN

SCALE	DRG. NO.	DATE	REV.
NTS	9790-01-2026	16-10-2026	0

DESIGNED	
DRAWN	DIVYA
TRACED	
CHECKED	
A.E.E	
E.E.	
DY.CE-I	
C.E.	

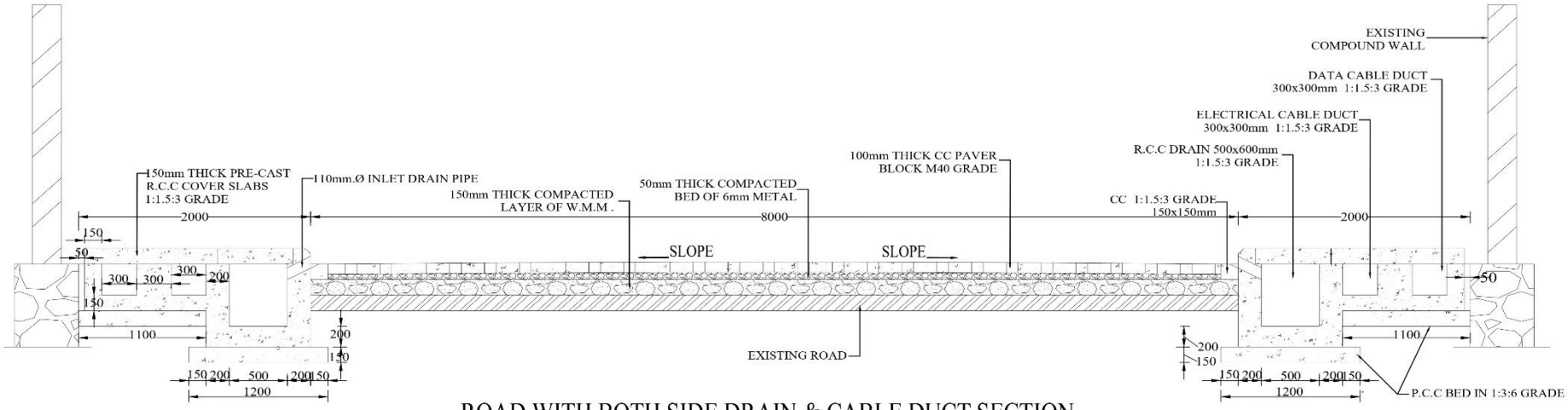

ROAD WITH BOTH SIDE DRAIN & CABLE DUCT SECTION

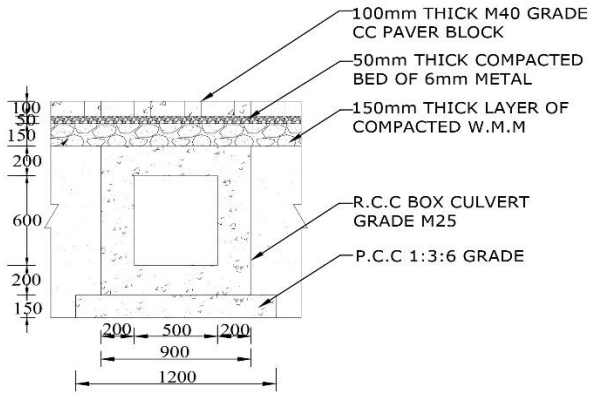

BOX TYPE CULVERT AT ROAD CROSSINGS

ISSUED FOR TENDER PURPOSE ONLY

NOTES :-

1. ALL DIMENSIONS ARE IN MILLIMETRES

NO.	DATE	REVISIONS	A.E.E.	E.E.	DY.CE-I

COCHIN PORT AUTHORITY
COCHIN - 682009

RECONSTRUCTION OF MARAR ROAD & GV IYYER ROAD WITH CC PAVER BLOCKS & CONSTRUCTION OF DRAIN,BOX CULVERTS,UTILITY DUCTS ETC. AT W/ISLAND

CROSS SECTION OF ROAD AND BOX CULVERT

DESIGNED	
DRAWN	DIVYA
TRACED	
CHECKED	
A.E.E	
E.E.	
DY.CE-I	
C.E.	

SCALE	DRG. NO.	DATE	REV.
NTS	9790-02-2026	16-10-2026	0